MACHINING DEVIATIONS FOR LINEAR DIMENSIONS	RANGE	0 - 6	6 - 30	30 - 120	120 - 315	315-1000	1000-2000	2000-4000	ABOVE 4000	RA
	TOLERANCE	±0.1	±0.2	±0.3	±0.5	±0.8	±1.2	±2	±3	~

FOR DIMENSIONAL TOLERANCES OF SHEET METAL PARTS AND WELDED STRUCTURES, REFER STD. RD-227

UNSPECIFIED TOLERANCE FOR LINEAR AND ANGULAR DIMENSIONS REF. IS 2102 (PT-1) (MEDIUM) — QUALITY OF WELD JOINTS REF, RD 230 MEDIUM

VALUES OF SURFACE TEXTURE SHALL BE AS PER COMPANY STD DS. 1012.C.

WELDING SHALL BE CARRIED OUT AS PER IS: 9595-96

STATUS: PROTO/PRODUCTION

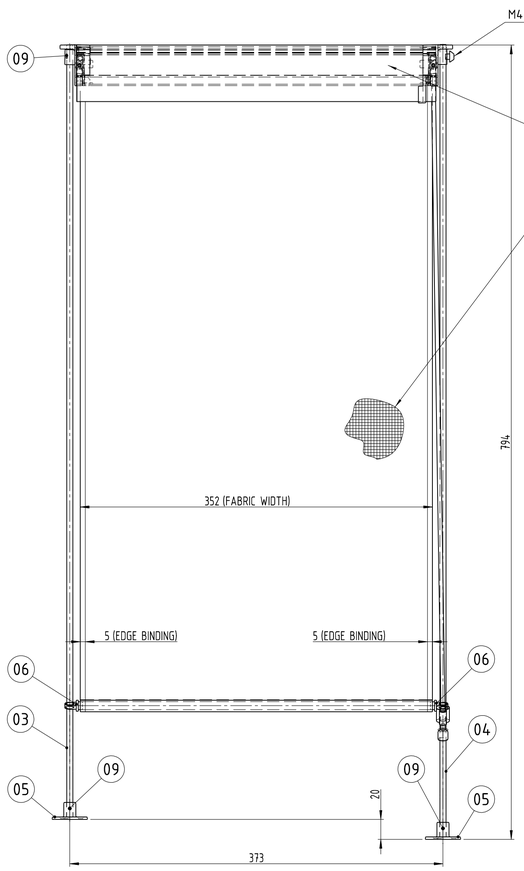

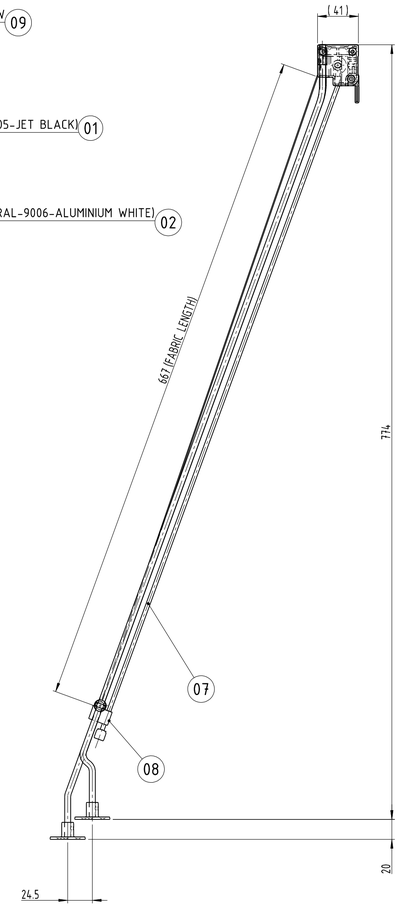

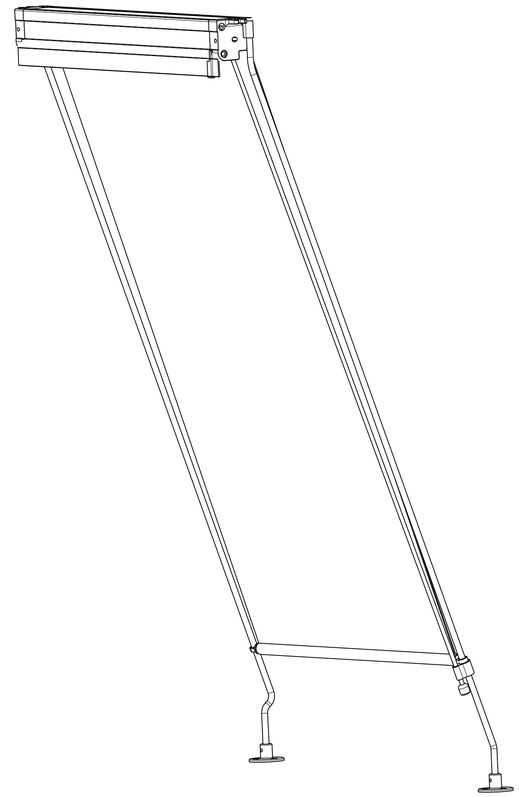

ISOMETRIC VIEW

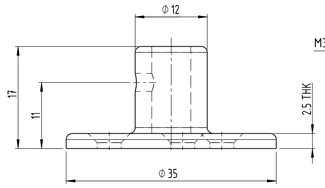

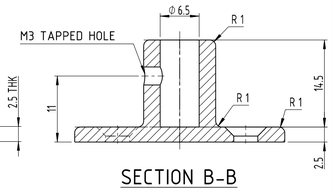

SECTION B-B

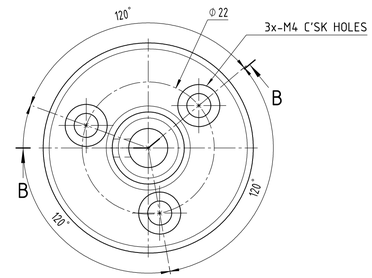

DETAIL-5

SPECIFICATION :

TYPE :	ROLLER BLIND
OPERATION :	MANUALLY OPERATED
MOUNTING TYPE :	CEILING MOUNTING TYPE
FABRIC :	
MATERIAL :	FIBRE GLASS FABRIC WITH PVC/VINYL COATING OR POLYESTER (PES) FABRIC
COLOUR :	RAL 9006-WHITE ALUMINIUM
VISIBILITY :	TRANSLUCENT
OPENNESS FACTOR :	5 TO 10 %
FIRE SAFETY :	SHALL COMPLY TO EN 45545-HL3 R1 REQUIREMENTS
EDGE BINDING :	TO BE PROVIDED

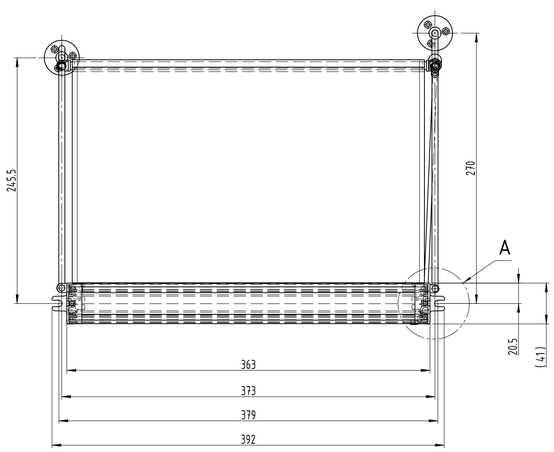

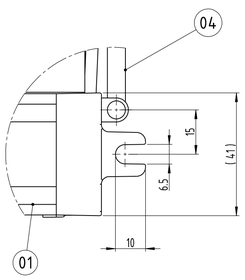

DETAIL-A

UNCONTROLLED

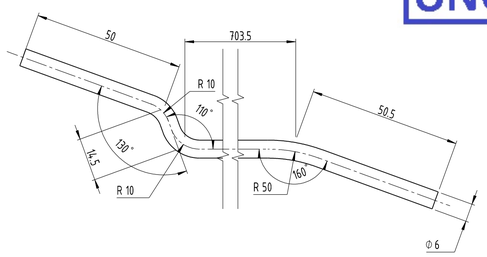

DETAIL-3

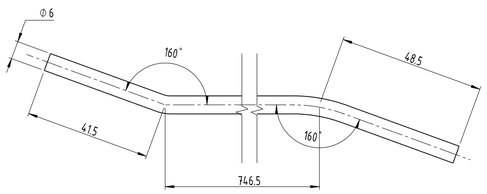

DETAIL-4

NOTE :
1. ALL DIMENSIONS ARE IN mm.
2. THE SUNBLIND ASSY SHALL COMPLY TO THE TDC DOC NO. GR/TD/5005.
3. THE FABRIC MATERIAL SHALL BE OF FIBER GLASS FABRIC WITH PVC/VINYL COATING OR POLYESTER (PES) FABRIC -TRANSLUCENT & FIRE SAFE, FIRE SAFETY SHALL COMPLY TO EN 45545-HL3 R1 REQUIREMENT.
   COLOUR: RAL 9006-WHITE ALUMINIUM.
4. THE EXPOSED SURFACE OF ITEM 1 - HOUSING ASSY SHALL BE PAINTED.
   COLOUR : BLACK TO RAL 9005.
5. ITEM 3 & 4 SHALL BE BUFF TO MIRROR FINISHED.
6. THE SAMPLE APPROVAL SHALL BE OBTAINED BEFORE BULK SUPPLIES.

SL.No.	QTY	PART / STOCK No.	DESCRIPTION	SIZE	COMPANY STD./LS	Wt. (Kg)
					MATERIAL	
12	1	-	GRIP-PULL	-	HARD PLASTIC-BLACK COLOUR	
11	1	-	CROSS RECESSED PAN HEAD SCREW	M3x5	IS:7483,MATL: ISO:3506, Gr-A2-70,SS	
10	2	-	CROSS RECESSED PAN HEAD SCREW	M4x10	IS:7483,MATL: ISO:3506, Gr-A2-70,SS	
9	2	-	SET SCREW, SOCKET-HEX HEAD	M3x2.5L-FLAT POINT (FP)	IS 6094/MATL : ISO:3506, Gr-A2-70,SS	
8	1	-	STOPPER	-	HARD PLASTIC-BLACK COLOUR	
7	1	-	ROPE-PULL	Φ3	ARAMID ROPE	
6	2	-	GUIDE SLIDER	-	HARD PLASTIC-BLACK COLOUR	
5	2	-	GUIDE BRACKET	-	SUS304/AISI304	
4	1	-	GUIDE RAIL RH	Φ6	SUS304/AISI304	
3	1	-	GUIDE RAIL LH	Φ6	SUS304/AISI304	
2	1	-	FABRIC-TRASLUCENT	-	FIRE RETARDANT GLASS FIBRE FABRIC/POLESTERIPES) FABRIC	
1	1	-	SUN BLIND HOUSING	-	ASSY	

ALT.NO.	ECN NO/CHANGES	DATE	BY	CHKD	APPD

PRODUCT: MUMBAI METRO CARS - L2 & L7

REF DRG

MATERIAL: -

HEAT TREAT

SURFACE TREAT

TITLE: SUN BLIND ASSY-LH

APPD		20.03.2020
REVD		20.03.2020
CHKD	N. Sivakumar	20.03.2020
DRWN		20.03.2020

SCALE 1:3 | SHEET 1 OF 1 | Wt. -

BEML LIMITED

DRG No. 525-18087

ALT -

A1

GRADE No. | VALUE | SYMBOL | SURFACE ROUGHNESS

COPY RIGHT & CONFIDENTIAL: THIS DOCUMENT IS THE EXCLUSIVE PROPERTY OF BEML & CONTAINS CONFIDENTIAL INFORMATION. THE INFORMATION CONTAINED IN ITS CONTENTS SHALL NOT BE REPRODUCED, DISCLOSED OR USED WITHOUT PRIOR WRITTEN PERMISSION OF BEML. THIS DOCUMENT & ALL ITS COPIES SHALL BE RETURNED TO BEML ON DEMAND (DRAWING RELEASED FROM PVR, PHYSICAL SIGNATURE NOT REQUIRED)