MACHINING DEVIATIONS FOR LINEAR DIMENSIONS	RANGE	0 - 6	6 - 30	30 - 120	120 - 315	315-1000	1000-2000	2000-4000	ABOVE 4000	RA
	TOLERANCE	±0.1	±0.2	±0.3	±0.5	±0.8	±1.2	±2	±3	~

FOR DIMENSIONAL TOLERANCES OF SHEET METAL PARTS AND WELDED STRUCTURES, REFER STD. RD-227

UNSPECIFIED TOLERANCE FOR LINEAR AND ANGULAR DIMENSIONS REF. IS 2102 (PT-1) (MEDIUM) | QUALITY OF WELD JOINTS REF, RD 230 MEDIUM

VALUES OF SURFACE TEXTURE SHALL BE AS PER COMPANY STD DS. 1012.C.

WELDING SHALL BE CARRIED OUT AS PER IS: 9595-96

STATUS:

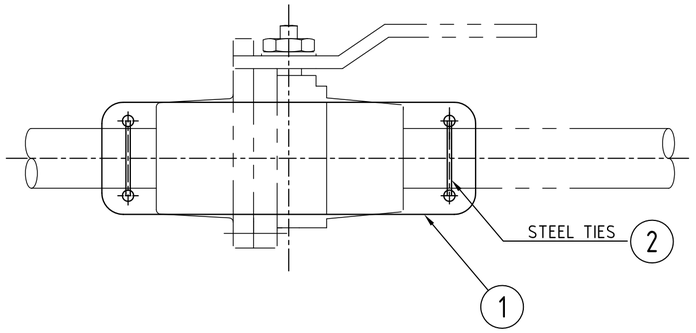

PART NO.	MARK
926-60042-01	CCIC
926-60042-02	L03
926-60042-03	L11
926-60042-04	SR
926-60042-05	ASR
926-60042-06	SGR

1

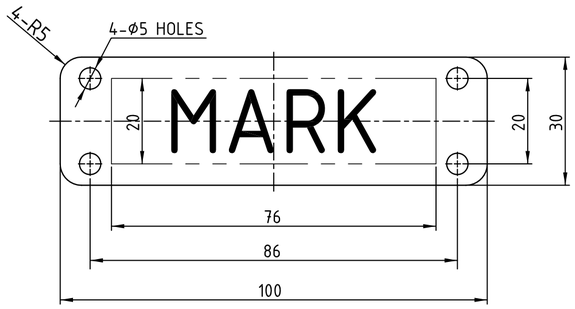

TYPE A

UNCONTROLLED COPY

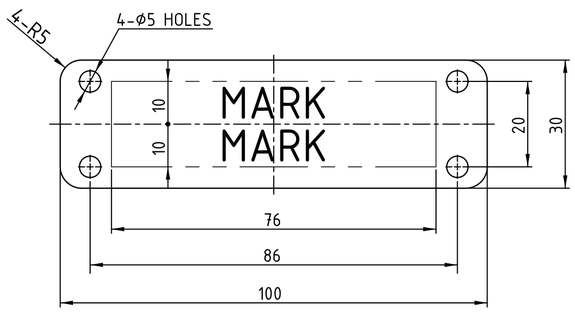

TYPE B

NOTE

1.FONT :GOTHIC-EXTRA

2.CHARACTER COLOR: BLACK

3.ENGRAVING AND ETCHING(0.2 mm)

4.REMOVE THE SHARP EDGE

SL.No.	QTY	PART / STOCK No.	DESCRIPTION	SIZE	COMPANY STD./I.S	Wt. (Kg)
2	2	555-60459	STEEL TIE		STAINLESS STEEL	
1	1		PLATE	T=0.8	SUS304	

MATERIAL

ALT.NO.	ECN NO/CHANGES	DATE	BY	CHKD	APPD
1	ECN 92610043 1) CCIC WAS CCD 2) PART NO.926-60042-02 TO PART NO.926-60042-06 ARE ADDED	19/02/2018	SK	GD	MS

PRODUCT	BMRCL METRO CARS
REF DRG	
MATERIAL	
HEAT TREAT.	
SURFACE TREAT.	
TITLE	NAME PLATE COCK
APPD	MS
REVD	MS
CHKD	GD
DRWN	SK
SCALE	1:1
SHEET	1 OF 1
Wt.(Kg)	-
DRG No.	926-60042
ALT	1

BEML LIMITED

A2

COPY RIGHT & CONFIDENTIAL
THIS DOCUMENT IS THE EXCLUSIVE PROPERTY OF BEML & CONTAINS CONFIDENTIAL INFORMATION. THIS DOCUMENT OR ITS CONTENTS SHALL NOT BE USED, REPRODUCED OR DISCLOSED IN WHOLE OR IN PART WITHOUT PRIOR WRITTEN PERMISSION OF BEML. THIS DOCUMENT & ALL ITS COPIES SHALL BE RETURNED TO BEML ON DEMAND DRAWING RELEASED FROM PLM, PHYSICAL SIGNATURE NOT REQUIRED

GRADE No.	N1	N2	N3	N4	N5	N6	N7	N8	N9	N10	N11	N12
VALUE	0.025	0.05	0.1	0.2	0.4	0.8	1.6	3.2	6.3	12.5	25	50
SYMBOL												

SURFACE ROUGHNESS