MACHINING DEVIATIONS FOR LINEAR DIMENSIONS	RANGE	0 - 6	6 - 30	30 - 120	120 - 315	315-1000	1000-2000	2000-4000	ABOVE 4000	RA
	TOLERANCE	±0.1	±0.2	±0.3	±0.5	±0.8	±1.2	±2	±3	~

FOR DIMENSIONAL TOLERANCES OF SHEET METAL PARTS AND WELDED STRUCTURES, REFER STD. RD-227

UNSPECIFIED TOLERANCE FOR LINEAR AND ANGULAR DIMENSIONS REF. IS 2102 (PT-1) (MEDIUM) | QUALITY OF WELD JOINTS REF, RD 230 MEDIUM

VALUES OF SURFACE TEXTURE SHALL BE AS PER COMPANY STD DS. 1012.C.

WELDING SHALL BE CARRIED OUT AS PER IS: 9595-96

STATUS:

UNCONTROLLED

COPY RIGHT & CONFIDENTIAL
THIS DOCUMENT IS THE EXCLUSIVE PROPERTY OF BEML & CONTAINS CONFIDENTIAL INFORMATION. THIS DOCUMENT OR ITS CONTENTS SHALL NOT BE USED, REPRODUCED OR DISCLOSED IN WHOLE OR IN PART, WITHOUT PRIOR WRITTEN PERMISSION OF BEML. THIS DOCUMENT & ALL ITS COPIES SHALL BE RETURNED TO BEML ON DEMAND
DRAWING RELEASED FROM PLM, PHYSICAL SIGNATURE NOT REQUIRED

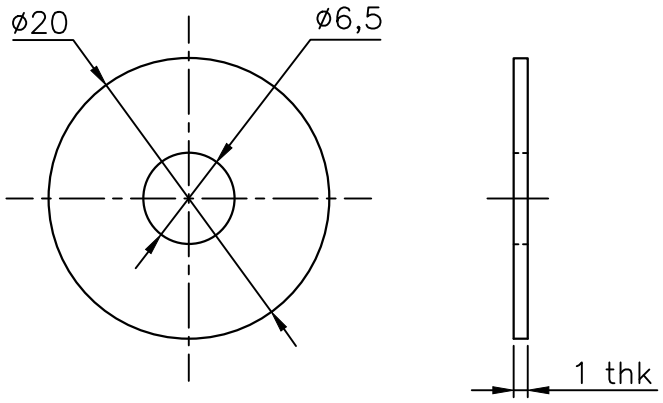

SIZE	COMPANY STD./I.S	Wt. (Kg)
ø20x1 thk	Fibre glass epoxy Laminate	IS:10192, Grade.EP-1
	MATERIAL	

SL.No.	QTY	PART / STOCK No.	DESCRIPTION

ALT.NO.	ECN NO/CHANGES	DATE	BY	CHKD	APPD

PRODUCT	DMRC RS9		
REF DRG			
MATERIAL			
HEAT TREAT.		APPD	JP	04.07.15
SURFACE TREAT.		REVD	JP	04.07.15
TITLE	FLAT WASHER	CHKD	SNH	
		DRWN	VISHNU	04.07.15
		SCALE	SHEET / OF	Wt.(Kg) 0
	BEML LIMITED NEW FRONTIERS. NEW DREAMS	DRG No.	919-56109	ALT

GRADE No.	N12	N11	N10	N9	N8	N7	N6	N5	N4	N3	N2	N1
VALUE	50	25	12.5	6.3	3.2	1.6	0.8	0.4	0.2	0.1	0.05	0.025
SYMBOL	~											

SURFACE ROUGHNESS

A4