MACHINING DEVIATIONS FOR LINEAR DIMENSIONS	RANGE	0 - 6	6 - 30	30 - 120	120 - 315	315-1000	1000-2000	2000-4000	ABOVE 4000	RA
	TOLERANCE	±0.1	±0.2	±0.3	±0.5	±0.8	±1.2	±2	±3	~

FOR DIMENSIONAL TOLERANCES OF SHEET METAL PARTS AND WELDED STRUCTURES, REFER STD. RD-227

UNSPECIFIED TOLERANCE FOR LINEAR AND ANGULAR DIMENSIONS REF. IS 2102 (PT.-1) (MEDIUM) — QUALITY OF WELD JOINTS REF. RD 230 MEDIUM

VALUES OF SURFACE TEXTURE SHALL BE AS PER COMPANY STD DS. 1012.C.

WELDING SHALL BE CARRIED OUT AS PER IS: 9595-96

STATUS: PROTO

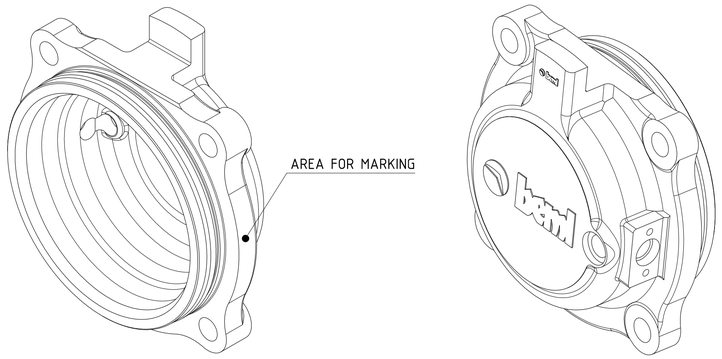

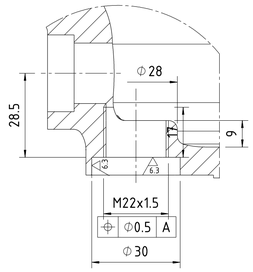

SECTION E-E

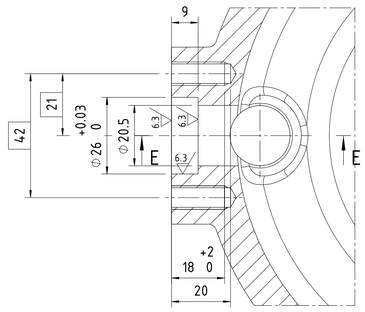

SECTION D-D

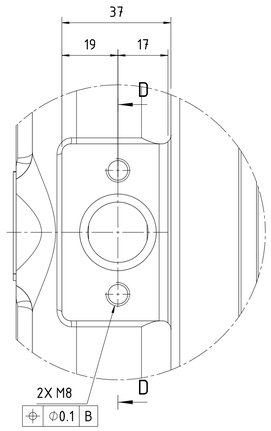

VIEW C

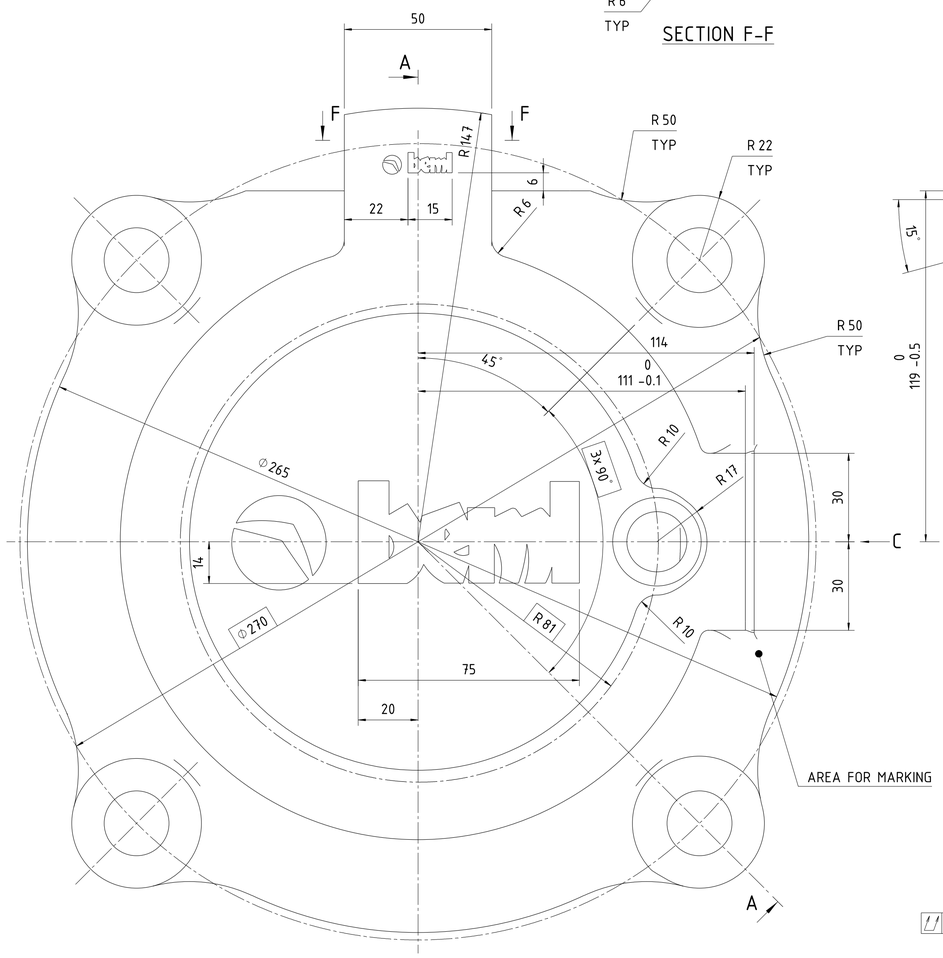

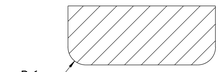

SECTION F-F

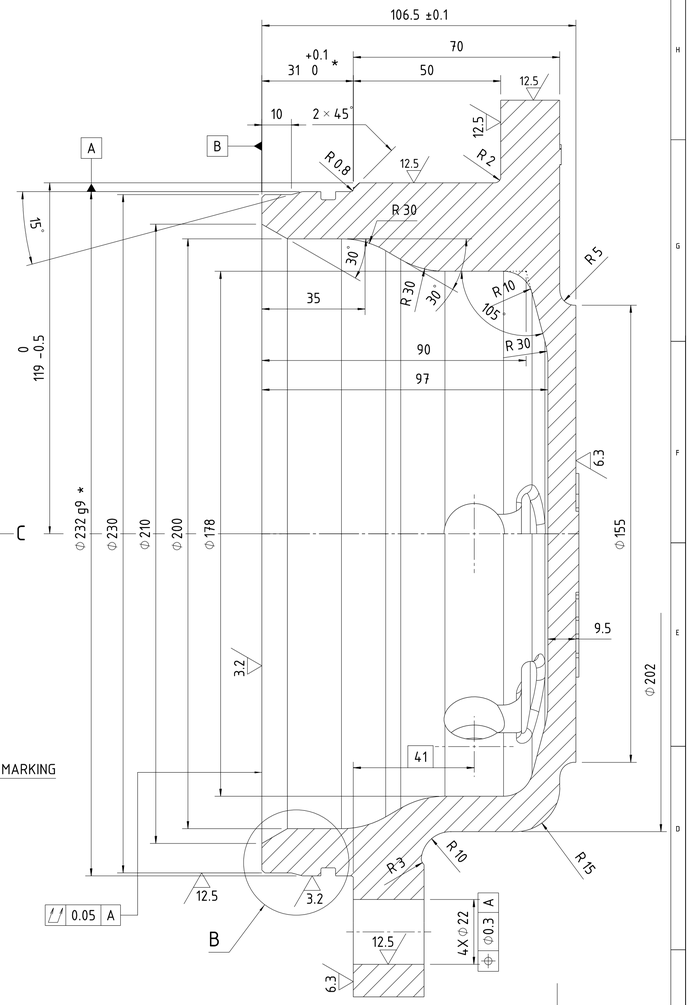

SECTION A-A

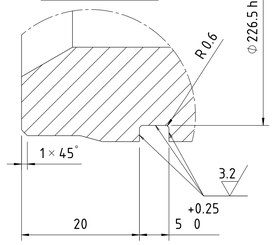

DETAIL B
(2:1)

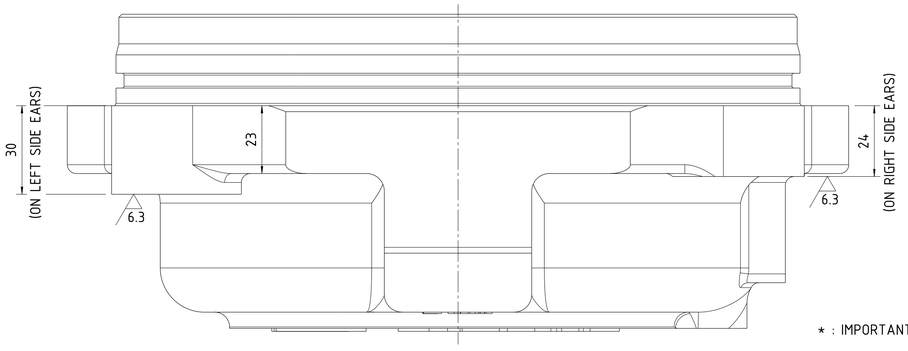

NOTES:

1 CONSIDER R3 FOR UNSPECIFIED RADIUS ON CASTING.
2 SCREW MACHINING SHOULD BE DONE ACCORDING TO ISO 261 NORMAL GRADE OR ABOVE.
3 DEVIATIONS ON UNTOLERENCED CAST DIMENSIONS SHALL BE TO IS:4897-1994, CLASS-2.
4 EMBOSS IN 10mm HIGH, 1.5mm RAISED LETTERS PART No., VENDOR CODE, MONTH & YEAR OF MFG., HEAT No., & SL. No., ON THE CASTING AS SHOWN IN THE DWG.
5 MANUFACTURER MUST FURNISH TEST CERTIFICATES FOR CHEMICAL COMPOSITION & MECHANICAL PROPERTIES FOR EACH BATCH OF SUPPLY.
6 THE MACHINED SURFACE SHALL BE COATED WITH RUST PREVENTIVE FLUID TO IS: 1154-2000.
7 OUTSIDE: TO BE PAINTED ACCORDING TO PAINTING MENTIONED IN BEML PTS DOC No. GR/TD/4637 EXCEPT MACHINED SURFACES.
8 FAI: ONE No. OF FINISH MACHINED SAMPLE SHALL BE SUPPLIED FREE ALONG WITH ALL MECHANICAL & CHEMICAL TEST REPORTS & DIMENSION CHECK SHEETS FOR EACH BATCH OF SUPPLY FOR APPROVAL BY BEML BEFORE BULK PRODUCTION.
9 THE CASTINGS SHALL CONFORM TO BEML PTS DOC. No. GR/TD/4637.
10 MOULDING TOOLING DEFINITION & DRAFT VALUES MUST COMPLY WITH THIS STANDARD FOR SG-IRON OBTAINED BY SAND CASTING AS PER EN 12890
11 REMOVE ALL SHARP EDGES AS BURRS AND CLEAN THE PARTS.
12 DIAMETER CONCENTRICITY OF 0.10 TO BE MAINTAINED
13 PERPENDICULARITY OF 0.10 TO BE MAINTAINED W.R.T. DIAMETERS
14 PARALLELISM OF 0.10 TO BE MAINTAINED W.R.T. AXIS LINE
15a CAST/EMBOSSMENT OF BEML LOGO AS PER BEML STANDARD DS 1019-C. COPY OF THE EXTRACT TO BE SHARED WITH THE VENDOR.
15b LOGO LENGTH SHALL BE L=15mm(at the top-1 place) AT DEPTH OF 0.5mm & L=75mm (at centre) AT DEPTH OF 1mm.

* : IMPORTANT PARAMETER

SL.No.	QTY	PART / STOCK No.	DESCRIPTION	SIZE	COMPANY STD./I.S. MATERIAL	Wt. (Kg)

PRODUCT	MUMBAI METRO CARS L2 & L7
REF DRG	
MATERIAL	EN-GJS-400-15 OF EN 1563
HEAT TREAT	
SURFACE TREAT	
TITLE	COVER WSP
APPD	MS
REVD	RSS
CHKD	DB
DRWN	VSE
SCALE	1:1
SHEET	1 OF 1
Wt.	13.00 kg
DRG No.	525-81103
ALT	0

BEML LIMITED
BEL HIGHTECH, NEW DELHI

ALT.NO. | ECN NO/CHANGES | DATE | BY | CHKD | DRGAY

A1

COPY RIGHT & CONFIDENTIAL: THIS DOCUMENT IS THE EXCLUSIVE PROPERTY OF BEML & CONTAINS CONFIDENTIAL INFORMATION. THIS DOCUMENT OR ITS CONTENTS SHALL NOT BE USED, REPRODUCED OR DISCLOSED IN WHOLE OR IN PART, WITHOUT PRIOR WRITTEN PERMISSION OF BEML. THIS DOCUMENT & ALL ITS COPIES SHALL BE RETURNED TO BEML ON DEMAND DRAWING RELEASED FROM PLM, PHYSICAL SIGNATURE NOT REQUIRED

GRAADE No.	N12	N11	N10	N9	N8	N7	N6	N5	N4	N3	N2	N1
VALUE	50	25	12.5	6.3	3.2	1.6	0.8	0.4	0.2	0.1	0.05	0.025
SYMBOL												

SURFACE ROUGHNESS