MACHINING DEVIATIONS FOR LINEAR DIMENSIONS	RANGE	0 - 6	6 - 30	30 - 120	120 - 315	315-1000	1000-2000	2000-4000	ABOVE 4000	RA
	TOLERANCE	±0.1	±0.2	±0.3	±0.5	±0.8	±1.2	±2	±3	~

FOR DIMENSIONAL TOLERANCES OF SHEET METAL PARTS AND WELDED STRUCTURES, REFER STD. RD-227

UNSPECIFIED TOLERANCE FOR LINEAR AND ANGULAR DIMENSIONS REF. IS 2102 (PT-1) (MEDIUM) | QUALITY OF WELD JOINTS REF, RD 230 MEDIUM

VALUES OF SURFACE TEXTURE SHALL BE AS PER COMPANY STD DS. 1012.C.

WELDING SHALL BE CARRIED OUT AS PER IS: 9595-96

STATUS: PROTO

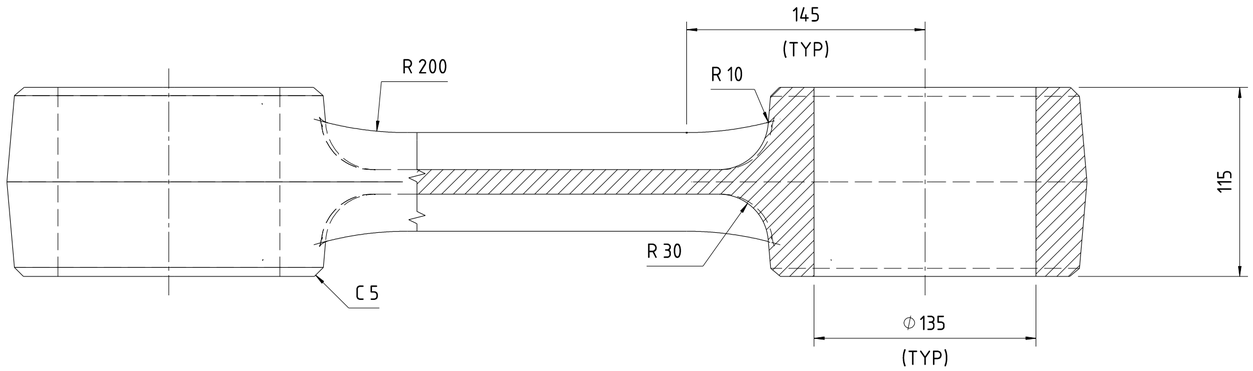

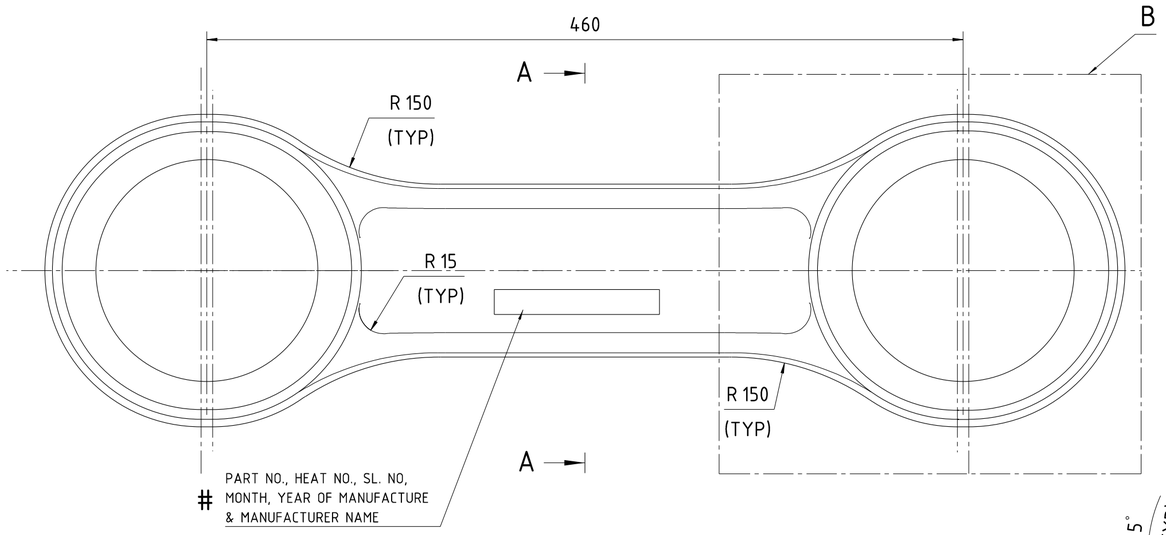

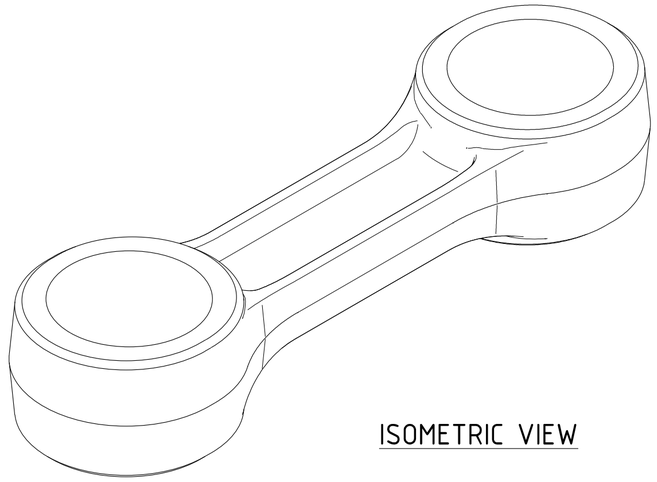

ISOMETRIC VIEW

UNCONTROLLED COPY

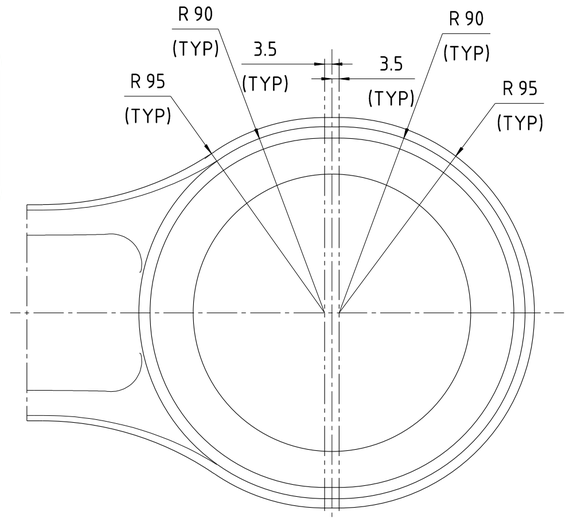

DETAIL-B

SCALE 1:2

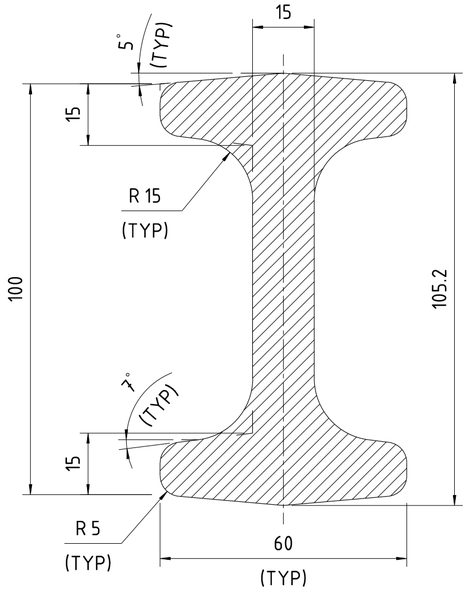

SECTION A-A

SCALE 1:1

NOTES:-

1. RADIUS NOT SPECIFIED SHALL BE R5 FORGING.
2. FORGING SHALL BE SUPPLIED IN NORMALISED CONDITION.
3. MANUFACTURER MUST FURNISH ALL TEST CERTIFICATES ALONG WITH THE DIMENSIONAL CHECK SHEETS AS PER FORGING PTS DOC. NO. GR/TD/4640 FOR EACH BATCH OF SUPPLY.
4. FAI: ONE NO.OF FINISH MACHINED SAMPLE OF MONO LINK SHALL BE SUPPLIED FREE ALONG WITH THE TEST REPORTS DIMENTIONAL CHECK SHEETS REPORTS FOR APPROVAL BY BEML BEFORE BULK PRODUCTION.
5. # EMBOSS IN 10 mm HIGH, 1.5mm RAISED LETTERS PART NO. AND HEAT NO. THE SL.NO.& MONTH AND YEAR OF MANUFACTURE SHALL BE PUNCHED.
6. THE FORGING SHALL STRICTLY CONFORM TO BEML PTS DOC. NO GR/TD/4640 AND ALL TEST REPORTS. AND TEST SPECIMANS AS SPECIFIED IN THE PTS SHALL BE SUBMITTED ALONG WITH DISPATCHES.

SL.No.	QTY	PART / STOCK No.	FORGING DESCRIPTION	SIZE	COMPANY STD./I.S MATERIAL	Wt. (Kg)

PRODUCT	MUMBAI METRO CARS L2 & L7
REF DRG	
MATERIAL	SF 490 A, JIS G 3201 OR IS: 2004-91, CLASS - 3
HEAT TREAT.	
SURFACE TREAT.	
TITLE	MONO-LINK (FORGED)
APPD	MS
REVD	RSS
CHKD	RSS
DRWN	VSE
SCALE	1:2.5
SHEET	1 OF 1
Wt.	32.8kg
DRG No.	525-82104
ALT	0

BEML LIMITED

ALT.NO.	ECN NO/CHANGES	DATE	BY	CHKD	APPD

A2

COPY RIGHT & CONFIDENTIAL
THIS DOCUMENT IS THE EXCLUSIVE PROPERTY OF BEML & CONTAINS CONFIDENTIAL INFORMATION. THIS DOCUMENT OR ITS CONTENTS SHALL NOT BE USED, REPRODUCED OR DISCLOSED IN WHOLE OR IN PART WITHOUT PRIOR WRITTEN PERMISSION OF BEML. THIS DOCUMENT & ALL ITS COPIES SHALL BE RETURNED TO BEML ON DEMAND DRAWING RELEASED FROM PLM, PHYSICAL SIGNATURE NOT REQUIRED

SURFACE ROUGHNESS	N1	N2	N3	N4	N5	N6	N7	N8	N9	N10	N11	N12
VALUE	0.025	0.05	0.1	0.2	0.4	0.8	1.6	3.2	6.3	12.5	25	50
SYMBOL												

GRADE No.