MACHINING DEVIATIONS FOR LINEAR DIMENSIONS	RANGE	0 - 6	6 - 30	30 - 120	120 - 315	315-1000	1000-2000	2000-4000	ABOVE 4000	RA
	TOLERANCE	±0.1	±0.2	±0.3	±0.5	±0.8	±1.2	±2	±3	~

FOR DIMENSIONAL TOLERANCES OF SHEET METAL PARTS AND WELDED STRUCTURES, REFER STD. RD-227

UNSPECIFIED TOLERANCE FOR LINEAR AND ANGULAR DIMENSIONS REF. IS 2102 (PT-1) (MEDIUM) | QUALITY OF WELD JOINTS REF, RD 230 MEDIUM

VALUES OF SURFACE TEXTURE SHALL BE AS PER COMPANY STD DS. 1012.C.

WELDING SHALL BE CARRIED OUT AS PER IS: 9595-96

STATUS:

COPY RIGHT & CONFIDENTIAL

THIS DOCUMENT IS THE EXCLUSIVE PROPERTY OF BEML & CONTAINS CONFIDENTIAL INFORMATION. THIS DOCUMENT OR ITS CONTENTS SHALL NOT BE USED, REPRODUCED OR DISCLOSED IN WHOLE OR IN PART, WITHOUT PRIOR WRITTEN PERMISSION OF BEML. THIS DOCUMENT & ALL ITS COPIES SHALL BE RETURNED TO BEML ON DEMAND

DRAWING RELEASED FROM PLM, PHYSICAL SIGNATURE NOT REQUIRED

UN CONTROLLED

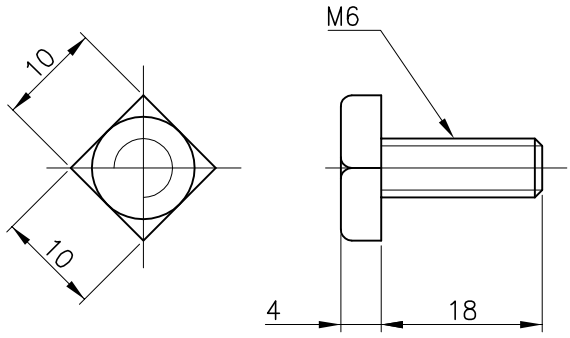

NOTE: SAMPLE SHALL BE APPROVED BEFORE BULK SUPPLY

SL.No.	QTY	PART / STOCK No.	DESCRIPTION	SIZE	COMPANY STD./I.S / MATERIAL	Wt. (Kg)
				M6x18L		

ALT.NO.	ECN NO/CHANGES	DATE	BY	CHKD	APPD

PRODUCT	MUMBAI METRO CARS- L2 & L7			
REF DRG				
MATERIAL	SUS304			
HEAT TREAT.		APPD	BMT	28.01.2020
SURFACE TREAT.		REVD	BMT	28.01.2020
TITLE	BOLT, SQUARE, HEAD SPECIAL	CHKD	PS	08.01.2018
		DRWN	PS	28.01.2020
		SCALE	NTS	SHEET 1 OF 1
		Wt.(Kg)	-	
	BEML LIMITED NEW FRONTIERS. NEW DREAMS	DRG No.	525-69124	ALT -

GRADE No.	N1	N2	N3	N4	N5	N6	N7	N8	N9	N10	N11	N12
VALUE	0.025	0.05	0.1	0.2	0.4	0.8	1.6	3.2	6.3	12.5	25	50
SYMBOL												

SURFACE ROUGHNESS

A4