MACHINING DEVIATIONS FOR LINEAR DIMENSIONS	RANGE	0 - 6	6 - 30	30 - 120	120 - 315	315-1000	1000-2000	2000-4000	ABOVE 4000	RA
	TOLERANCE	±0.1	±0.2	±0.3	±0.5	±0.8	±1.2	±2	±3	~

FOR DIMENSIONAL TOLERANCES OF SHEET METAL PARTS AND WELDED STRUCTURES, REFER STD. RD-227

UNSPECIFIED TOLERANCE FOR LINEAR AND ANGULAR DIMENSIONS REF. IS 2102 (PT-1) (MEDIUM) | QUALITY OF WELD JOINTS REF, RD 230 MEDIUM

VALUES OF SURFACE TEXTURE SHALL BE AS PER COMPANY STD DS. 1012.C.

WELDING SHALL BE CARRIED OUT AS PER IS: 9595-96

STATUS: PROTO

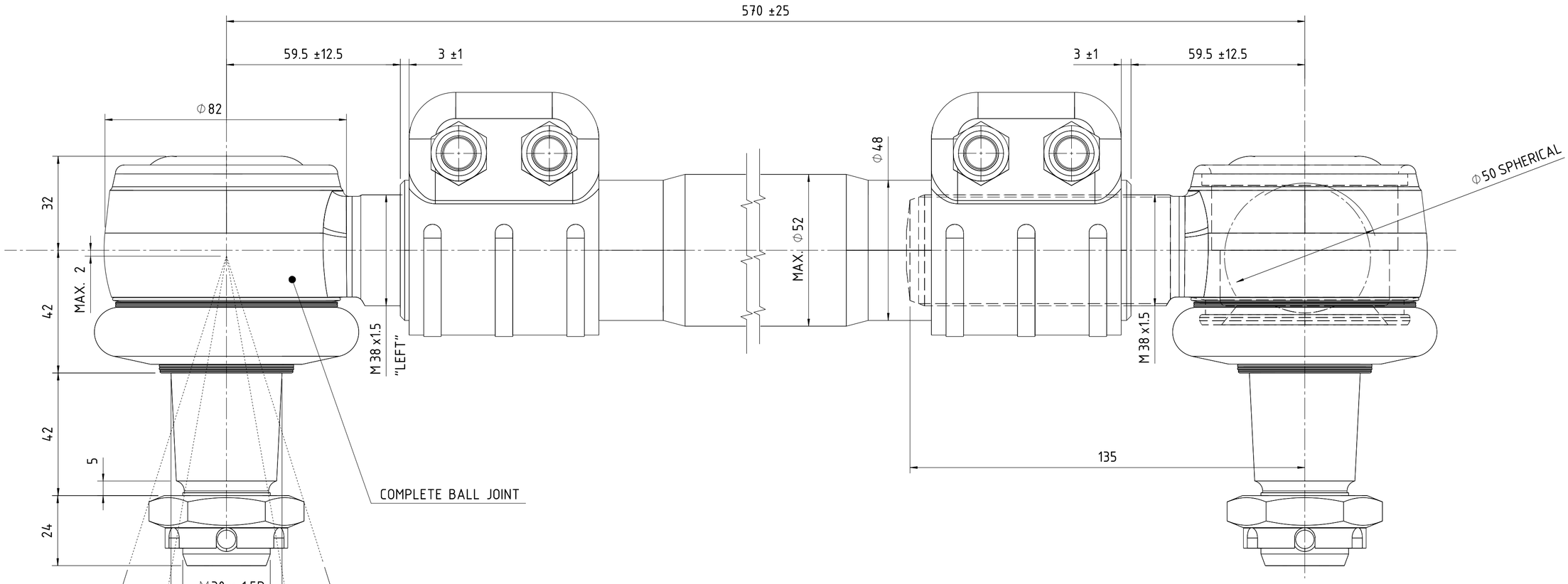

NOTES:

1. MAINTENANCE FREE
2. JOINT & CAVITY UNDER SEALING CAP SHALL BE FILLED WITH SPECIAL GREASE. DETAILS SHALL BE PROVIDED BY THE SUPPLIER
3. SUPPLIER TO PROVIDE MATERIAL DETAILS OF ALL COMPONENTS WITH RELEVANT STANDARDS
4. SUPPLIER TO PROVIDE THE BALL PIN HARDENING DETAILS ALONG WITH RELEVANT STANDARDS.
5. SURFACE TREATMENT/PROTECTION DETAILS OF ALL COMPONENTS SHALL BE PROVIDED BY THE SUPPLIER ALONG WITH RELEVANT STANDARDS.
6. BENDING FORCE OF PIVOT SHALL BE PROVIDED BY THE SUPPLIER.
7. HARDWARE DETAILS ALONG WITH TIGHTENING TORQUE SHALL BE PROVIDED BY THE SUPPLIER.
8. IDENTIFICATION/MARKING DETAILS & LOCATION TO BE INDICATED ON THE DRAWING.
9. PROTECTION: BLACK GREY PAINTING ACCORDING TO NCS 8500N EXCEPT BALL JOINTS TAPERS AND THREADINGS M38 * 1.5

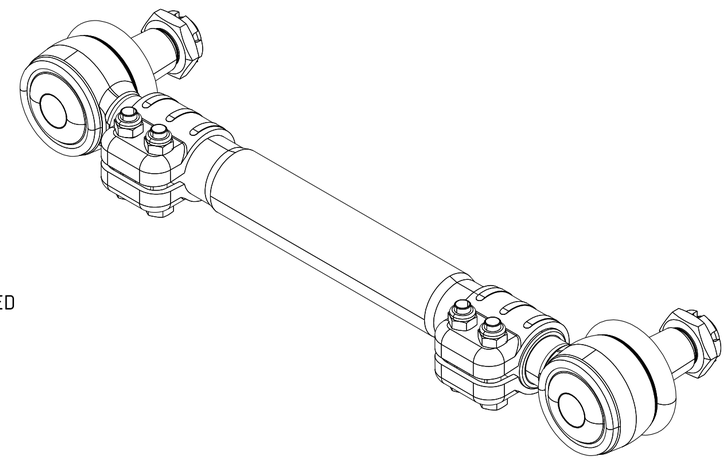

ISOMETRIC VIEW

SL.No.	QTY	PART / STOCK No.	DESCRIPTION	SIZE	COMPANY STD./I.S	Wt. (Kg)
					MATERIAL	

PRODUCT	MUMBAI METRO CARS L2 & L7		
REF DRG			
MATERIAL	–		
HEAT TREAT.		APPD	MS
SURFACE TREAT.		REVD	RSS
TITLE	ROD, ANTIROLL BAR	CHKD	VSE
		DRWN	CS
		SCALE 1:1	SHEET 1 OF 1 — Wt. 11.5 kg
	BEML LIMITED	DRG No. 525-83070	ALT 0

ALT.NO.	ECN NO/CHANGES	DATE	BY	CHKD	APPD

A2

COPY RIGHT & CONFIDENTIAL THIS DOCUMENT IS THE EXCLUSIVE PROPERTY OF BEML & CONTAINS CONFIDENTIAL INFORMATION. THIS DOCUMENT OR ITS CONTENTS SHALL NOT BE USED, REPRODUCED OR DISCLOSED IN WHOLE OR IN PART WITHOUT PRIOR WRITTEN PERMISSION OF BEML. THIS DOCUMENT & ALL ITS COPIES SHALL BE RETURNED TO BEML ON DEMAND DRAWING RELEASED FROM PLM, PHYSICAL SIGNATURE NOT REQUIRED

GRADE No.	N12	N11	N10	N9	N8	N7	N6	N5	N4	N3	N2	N1
VALUE	50	25	12.5	6.3	3.2	1.6	0.8	0.4	0.2	0.1	0.05	0.025
SYMBOL	~											

SURFACE ROUGHNESS