MACHINING DEVIATIONS FOR LINEAR DIMENSIONS	RANGE	0 - 6	6 - 30	30 - 120	120 - 315	315-1000	1000-2000	2000-4000	ABOVE 4000	RA
	TOLERANCE	±0.1	±0.2	±0.3	±0.5	±0.8	±1.2	±2	±3	~

FOR DIMENSIONAL TOLERANCES OF SHEET METAL PARTS AND WELDED STRUCTURES, REFER STD RD-227

UNSPECIFIED TOLERANCE FOR LINEAR AND ANGULAR DIMENSIONS REF IS 2102 (PT-1) (MEDIUM) | QUALITY OF WELD JOINTS REF. RD 230 MEDIUM

VALUES OF SURFACE TEXTURE SHALL BE AS PER COMPANY STD DS. 1012.C

WELDING SHALL BE CARRIED OUT AS PER IS. 9595-96

STATUS: PRODUCTION

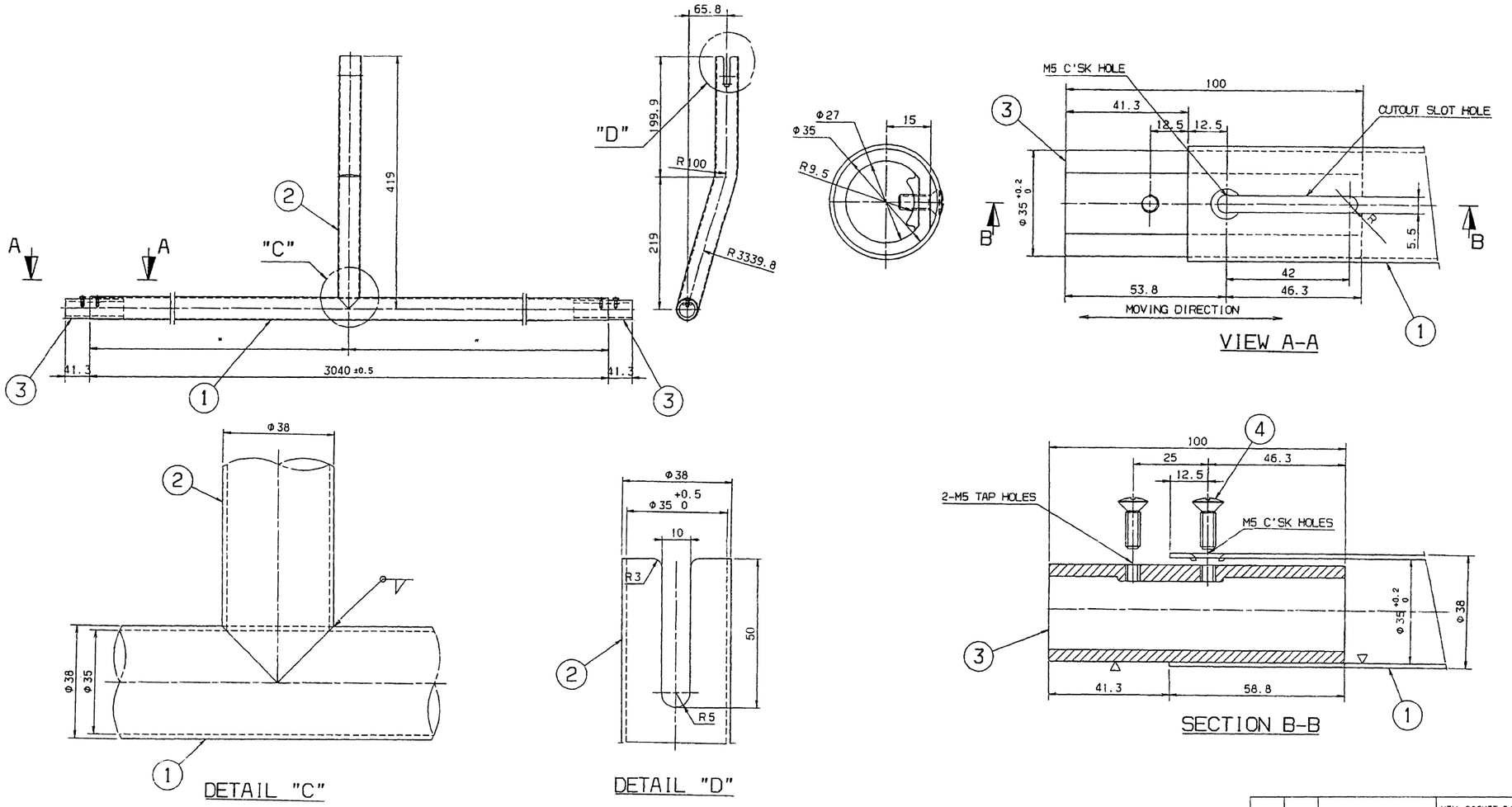

UNCONTROLLED

SL.No.	QTY	PART / STOCK No.	DESCRIPTION	SIZE	COMPANY STD./I.S. MATERIAL	Wt. (Kg)
4	4	RFS8160516	HEX. SOCKET RAISED CSK HEAD SCREW WITH PRE APPLIED NYLOK BLUE PATCH	M5x16	IS: 7486-2005. FOR HEX SOCKET M4 HEAD IS: 6761-94 / MATL: IS: 1367-(P14)-84, GR:A2-70	
3	2	909-29017-03	JOINT, PIN	Φ35	SUS 304	
2	1	909-29017-02	PIPE	Φ38x1.5THK	SUS 304	
1	1	909-29017-01	PIPE	Φ38x1.5THK	SUS 304	

NOTE:

1. ASSEMBLY SHALL CONFORM TO PTS DOC. No. GR/TD/3015.
2. THE FIRST REMOVAL PREVAILING TORQUE OF NYLOK IS 3.5 kg.cm FOR M5 SCREW.

ALT.NO.	ECN NO/CHANGES	DATE	BY	CHKD	APPD

PRODUCT: DMRC BG METRO CARS

REF DRG

MATERIAL: -

HEAT TREAT: -

SURFACE TREAT: -

TITLE: GRAB POLE (F)

APPD: [signature] 24/10/15

REVD:

CHKD: [signature] 20-10-15

DRWN: PURUSHOTHAMAN 05/09/2015

SCALE: NTS | SHEET: 1 OF 1 | Wt.(Kg): -

BEML LIMITED

DRG No. 909-29017 | ALT -

A2

COPY RIGHT & CONFIDENTIAL THIS DOCUMENT IS THE EXCLUSIVE PROPERTY OF BEML & CONTAINS CONFIDENTIAL INFORMATION. THIS DOCUMENT OR ITS CONTENTS SHALL NOT BE USED, REPRODUCED OR DISCLOSED IN WHOLE OR IN PART, WITHOUT PRIOR WRITTEN PERMISSION OF BEML. THIS DOCUMENT & ALL ITS COPIES SHALL BE RETURNED TO BEML ON DEMAND. DRAWING RELEASED FROM PLM, PHYSICAL SIGNATURE NOT REQUIRED

GRADE No.	N12	N11	N10	N9	N8	N7	N6	N5	N4	N3	N2	N1
VALUE	50	25	12.5	6.3	3.2	1.6	0.8	0.4	0.2	0.1	0.05	0.025
SYMBOL	~											

SURFACE ROUGHNESS