PRODUCED BY AN AUTODESK EDUCATIONAL PRODUCT

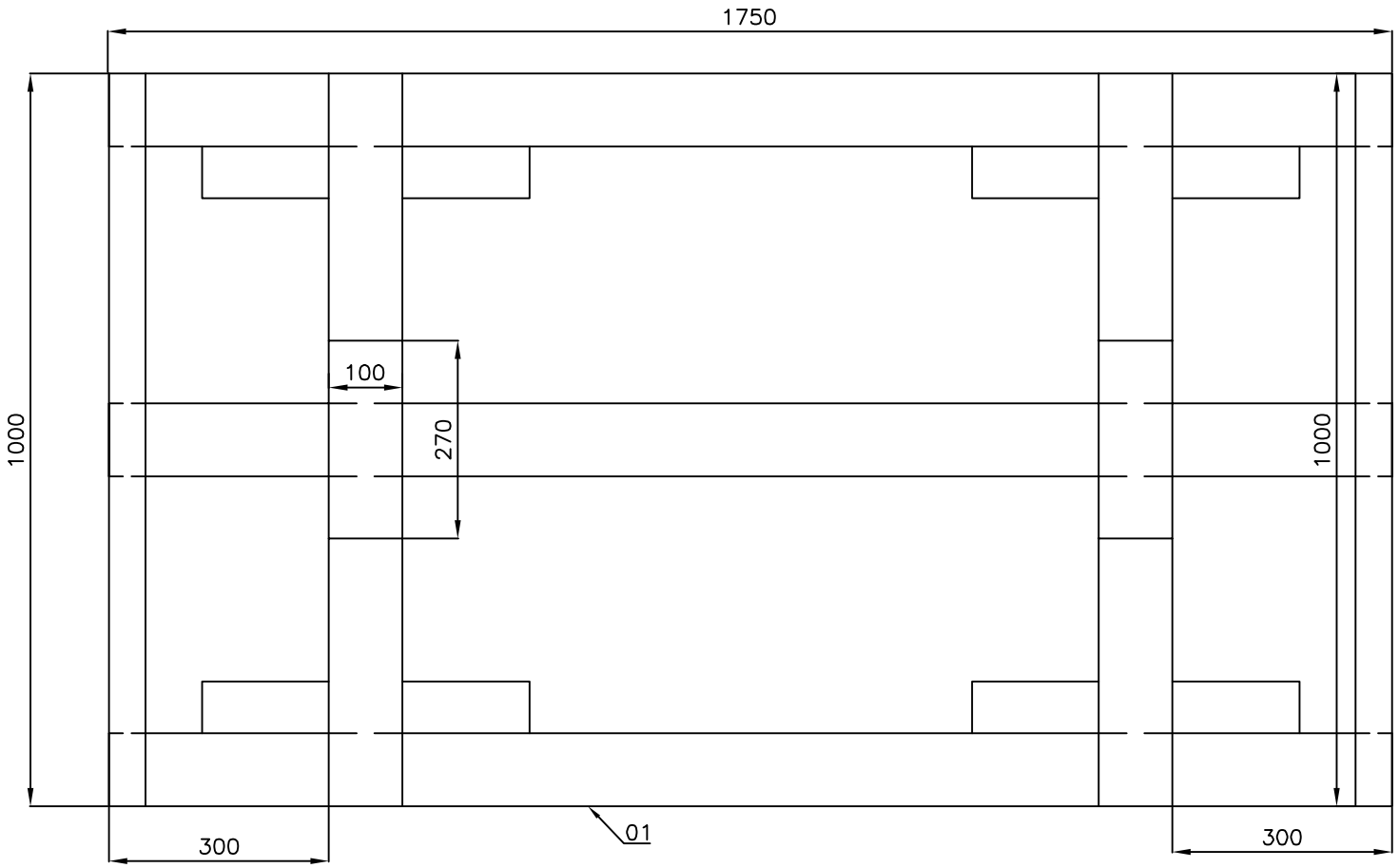

C:\Documents and Settings\Tool1\Desktop\P_20170624_084337_1_p.jpg

WOODEN SKID IMAGE

NOTE:
1.ALL THE JOINTS SUITABLY NAILED AS PER STANDARD PRACTICE
2.SKID SHOULD BE STURDY TO HANDLE ENGINE WEIGHT,SUITABLE REINFORCEMENT TO BE ADDED AT NECESSARY AREAS
3.ALL DIMENSIONS ARE IN MM

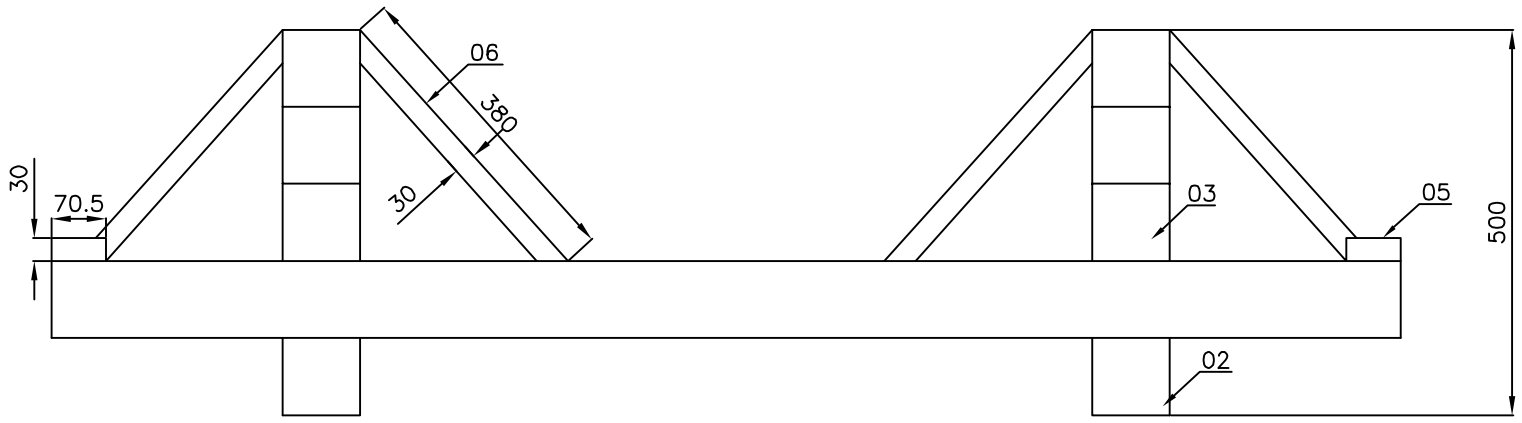

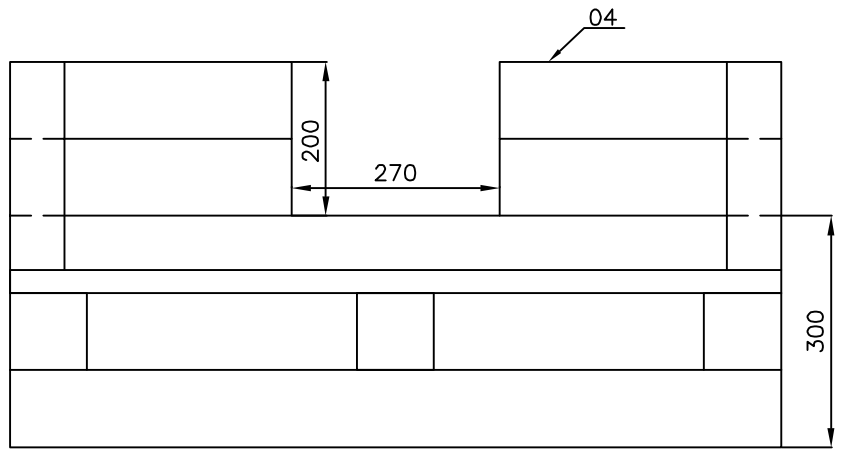

SL.NO	QTY	DESCRIPTION	MATERIAL	SIZE	REMARKS
13	32	HEX NUT	STD	M12	———
12	32	WASHER	STD	M12	———
11	32	HEX HEAD BOLT	STD	M12x180	———
10	6	HEX HEAD BOLT	STD	M12x200	———
09	44	PLANK	WOOD	100x20x1750	FOR FRONT COVER
08	32	PLANK	WOOD	100x20x1750	FOR TOP COVER
07	32	PLANK	WOOD	100x20x1110	FOR BASE AND SIDE COVER
06	8	PLANK	WOOD	70.5x30x1000	———
05	2	PLANK	WOOD	70.5x30x1000	———
04	4	PLANK	WOOD	100x100x1000	———
03	2	PLANK	WOOD	100x100x1000	———
02	2	PLANK	WOOD	100x100x1000	———
01	3	PLANK	WOOD	100x100x1750	———

AMEND.	NO.	SIGNATURE	DATE
APPROVED			
REVIEWED			
CHECKED			
DRAWN			
STDS.			

PRODUCT BEML ENGINE

DESIGN REF.

USED ON	QTY.
105 ENGINE	

MATERIAL: JUNGLE WOOD

HEAT TREATMENT: ———

Wt.IN Kgs. ———

SCALE

TITLE: WOODEN SKID AND PACKING BOX FOR 105 ENGINE

SHEET NO. 1

NO.OF SHEETS 1

Bharat Earth Movers Ltd., Engine Division, Mysore.

DRG.NO. 80-03-9-0053-5

PRODUCED BY AN AUTODESK EDUCATIONAL PRODUCT