NEXT ASSY	QTY	MODEL
946-00002	01	BW CMV

MACHINING DEVIATIONS FOR LINEAR DIMENSIONS	RANGE	6 – 6	6 – 30	30 – 120	120 – 315	315-1000	1000-2000	2000-4000	ABOVE 4000	RA
	TOLERANCE	±0.1	±0.2	±0.3	±0.5	±0.8	±1.2	±2	±3	~

FOR DIMENSIONAL TOLERANCES OF SHEET METAL PARTS AND WELDED STRUCTURES, REFER STD RD-227

UNSPECIFIED TOLERANCE FOR LINEAR AND ANGULAR DIMENSIONS REF: IS 2102 (PT-I) (MEDIUM)

QUALITY OF WELD JOINTS REF. RD 230 MEDIUM

VALUES OF SURFACE TEXTURE SHALL BE AS PER COMPANY STD DS. 1912.C

WELDING SHALL BE CARRIED OUT AS PER IS: 7095-76

STATUS: PROTO

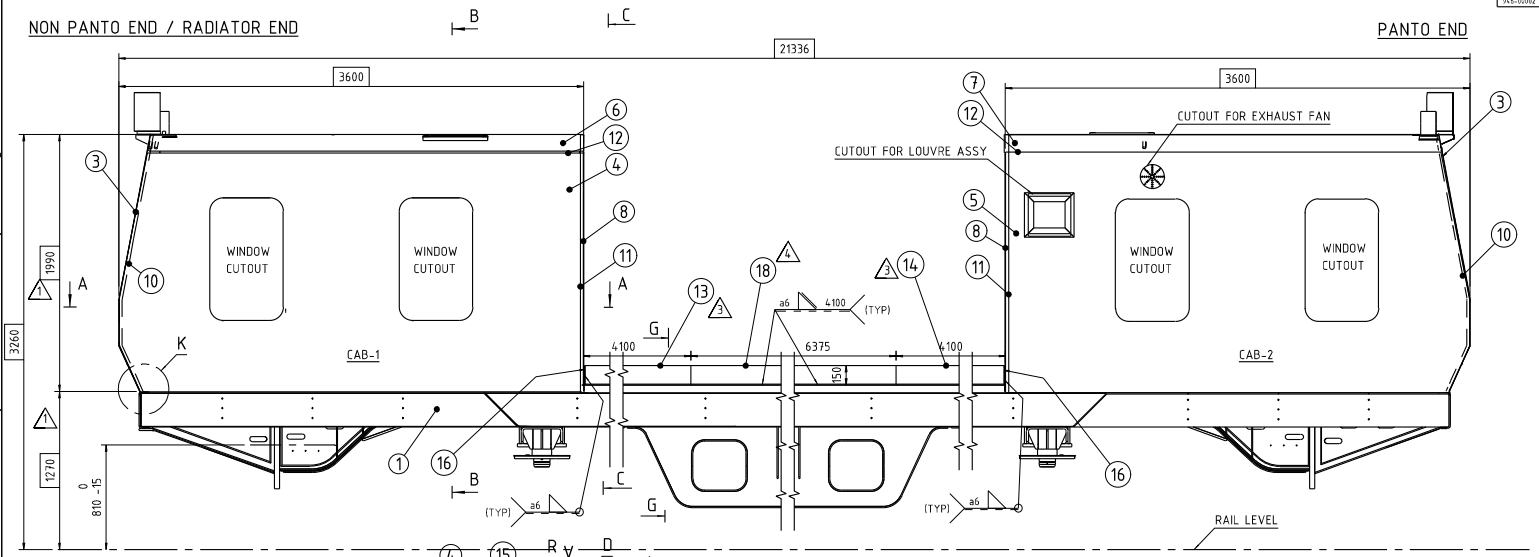

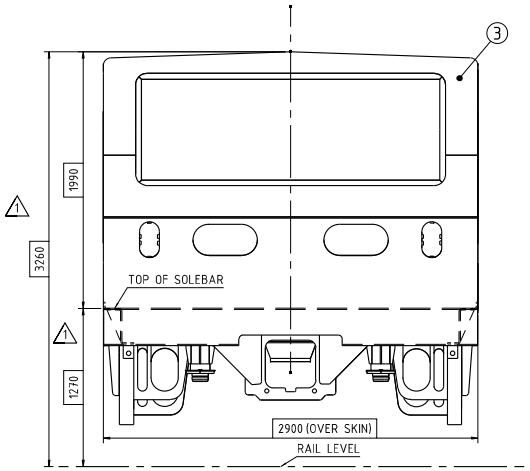

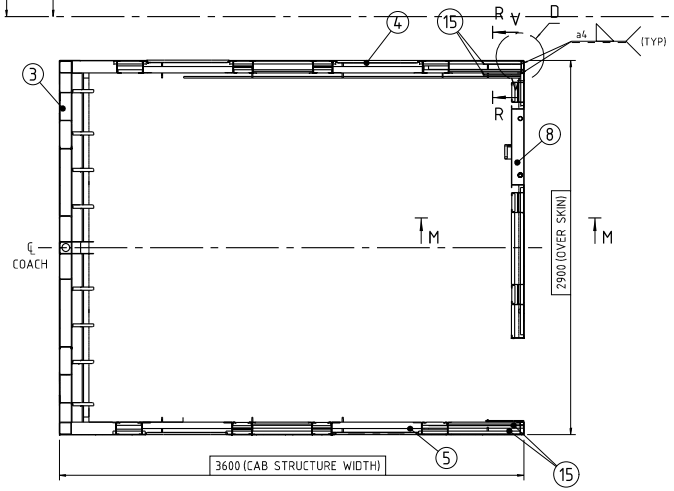

SECTION A-A

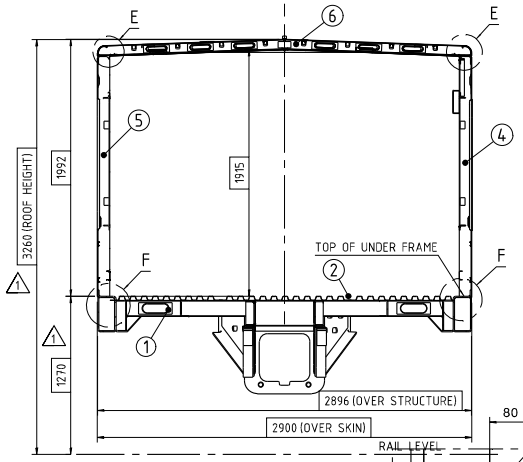

SECTION B-B

NOTES:-

1. SHELL ASSY TO BE SHOT BLASTED & PAINTED WITH ONE COAT OF PU PRIMER.
2. WELDING SYMBOLS ACCORDING TO IS 813.
3. REMOVE ALL SHARP EDGES AND BURRS.
4. DIMENSIONS MARKED WITH THE SYMBOLS ▭ ARE REGULATORY & FITMENT REQUIREMENTS RESPECTIVELY & TO BE STRICTLY ADHERED.
5. UNDERFRAME CAMBER OF 25 +5/-2mm SHALL BE MAINTAINED AT SHELL ASSY STAGE ALSO.

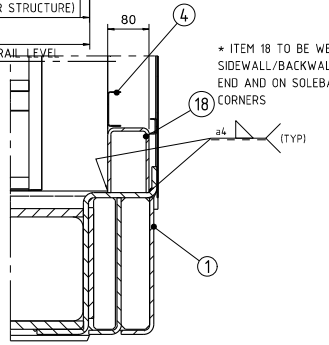

* ITEM 18 TO BE WELDED TO SIDEWALL/BACKWALL ASSY REAR END AND ON SOLEBAR AT 4 CORNERS

SECTION R-R
1:5
(ROTATED 90° CCW)

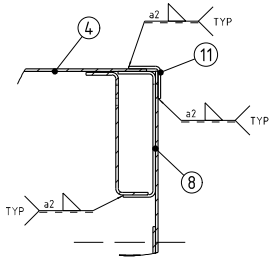

DETAIL D
1:2
(TYP)

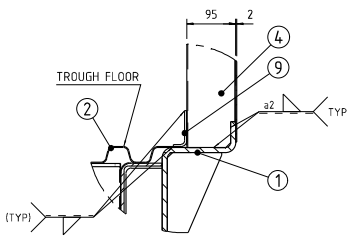

DETAIL F
1:5
(TYP)

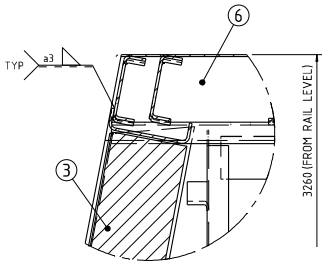

DETAIL P
1:5

SL.No.	QTY	PART / STOCK No.	DESCRIPTION	SIZE (mm)	COMPANY STD./LS	WT. (Kg)
					MATERIAL	
18	2	946-40009	BOX ASSY (MIDDLE UF)			
17	4	946-40126	SUPPORT PLATE			
16	4	946-40124	GUSSET			
15	8	946-40123	SUPPORT PLATE			
14	2	946-40007	SIDE SUPPORT ASSY-RH			
13	2	946-40006	SIDE SUPPORT ASSY LH			
12	1	946-40002	INSTALLATION OF WATER WRIGGLE & WATER GUTTER			
11	2	946-40005	ANGLE ASSY(BACKWALL)			
10	2	946-40004	ANGLE ASSY(CAB FRONT)			
9	2	946-40003	ANGLE ASSY (FLOOR SKIRTING)			
8	2	946-44002	CAB BACKWALL			
7	1	946-46002	ROOF STRUCTURE			
6	1	946-46001	ROOF STRUCTURE			
5	2	946-43002	SIDEWALL			
4	2	946-43001	SIDEWALL			
3	2	946-44001	CAB FRONT			
2	1	946-42101	TROUGH FLOOR			
1	1	946-41001	UNDER FRAME			

ALT.NO	ECN NO/CHANGES	DATE	BY	CHECKED	APPD	MODIFIED BY
4	18 ITEM #18 ADDED. ECN No.946-10030	27.12.2019	SOMESH	SOMESH		
3	13 ITEM #15, 16, 17 ADDED. 27 ITEM #13, #14 REVISED. SHT 2 ADDED. ECN No.946-10025	30.07.2019	SOMESH	SOMESH	BMT	
2	13 ITEM #13, #14 ADDED. VIEWS UPATED ECN No.946-10024	08.03.2019	SOMESH	SOMESH	BMT	
1	10 Dim 1210mm was 1225mm, 3260mm was 3215mm ECN No.946-10018	27.12.2019	SOMESH	SOMESH		

PRODUCT: BW CMV WITH LIFTING PLATFORM & CRANE - DMRC

REF DRG

MATERIAL: NA

HEAT TREAT / SURFACE TREAT / STYLE

APPD BMT 30.08.2018

RCVD BMT 30.08.2018

CHKD SRPT 30.08.2018

DRWN AC 28.08.2018

SHELL INSTALLATION

SCALE 1:20 | SHEET 1 OF 2 | WT. 15000Kg

DRG No. 946-40001 | ALT 4

BEML LIMITED

A1

COPY RIGHT & CONFIDENTIAL THIS DOCUMENT IS THE EXCLUSIVE PROPERTY OF BEML & CONTAINS CONFIDENTIAL INFORMATION. THE DOCUMENT OR ITS CONTENTS SHALL NOT BE REPRODUCED, DISCLOSED, TRANSMITTED OR PUBLISHED IN WHOLE OR IN PART WITHOUT WRITTEN PERMISSION FROM BEML LTD. THE DRAWING IS VALID ONLY WHEN SIGNED BY AUTHORISED SIGNATORY. DRAWING RELEASED FROM PLM, PHYSICAL SIGNATURE NOT REQUIRED

SYMBOL	VALUE
SURFACE ROUGHNESS	