MACHINING DEVIATIONS FOR LINEAR DIMENSIONS	RANGE	0 - 6	6 - 30	30 - 120	120 - 315	315-1000	1000-2000	2000-4000	ABOVE 4000	RA
	TOLERANCE	±0.1	±0.2	±0.3	±0.5	±0.8	±1.2	±2	±3	~

FOR DIMENSIONAL TOLERANCES OF SHEET METAL PARTS AND WELDED STRUCTURES, REFER STD. RD-227

UNSPECIFIED TOLERANCE FOR LINEAR AND ANGULAR DIMENSIONS REF. IS 2102 (PT-1) (MEDIUM) | QUALITY OF WELD JOINTS REF, RD 230 MEDIUM

VALUES OF SURFACE TEXTURE SHALL BE AS PER COMPANY STD DS. 1012.C.

WELDING SHALL BE CARRIED OUT AS PER IS: 9595-96

STATUS: ~~MOCKUP/PROTO~~/PRODUCTION

COPY RIGHT & CONFIDENTIAL THIS DOCUMENT IS THE EXCLUSIVE PROPERTY OF BEML & CONTAINS CONFIDENTIAL INFORMATION. THIS DOCUMENT OR ITS CONTENTS SHALL NOT BE USED, REPRODUCED OR DISCLOSED IN WHOLE OR IN PART, WITHOUT PRIOR WRITTEN PERMISSION OF BEML. THIS DOCUMENT & ALL ITS COPIES SHALL BE RETURNED TO BEML ON DEMAND DRAWING RELEASED FROM PLM, PHYSICAL SIGNATURE NOT REQUIRED

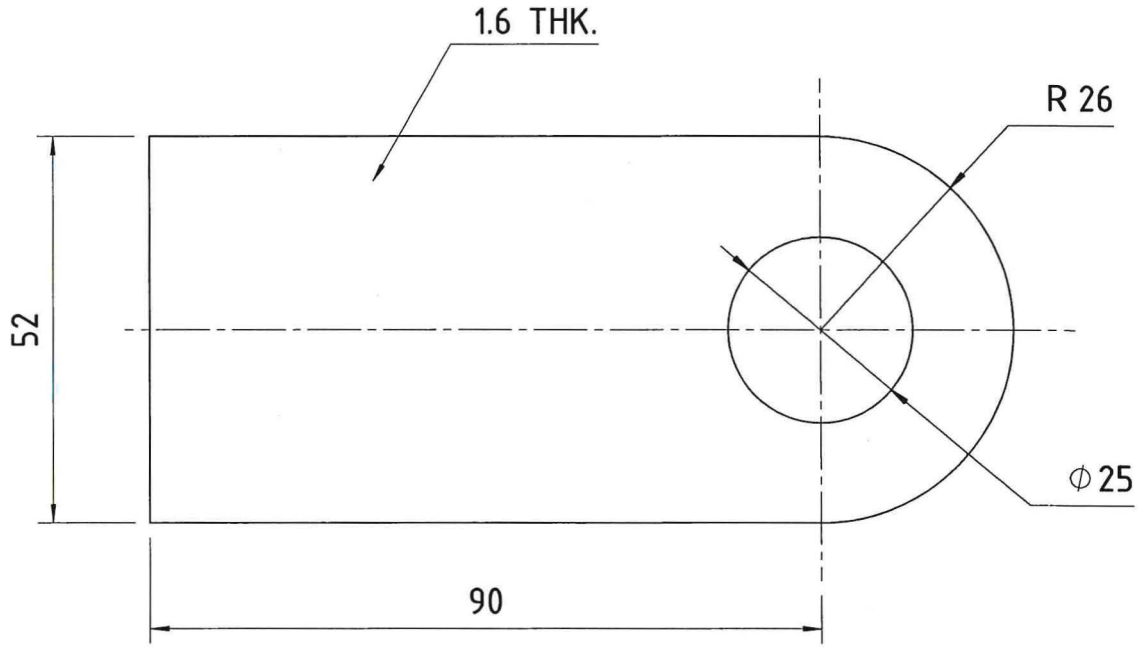

UN CONTROLLED COPY

NOTE:-

PART SHALL BE ZINC PLATED AS PER SERVICE GRADE No. 2 OF IS:1573-86 AND CHROMATE PASSIVATED TO COLOUR IRIDESCENT YELLOW

SL.No.	QTY	PART / STOCK No.	DESCRIPTION	SIZE (mm)	COMPANY STD./I.S	Wt. (Kg)
		C100603160		116x52x1.6THK.	MATERIAL	

ALT.NO.	ECN NO/CHANGES	DATE	BY	CHKD	APPD

GRADE No.	N1	N2	N3	N4	N5	N6	N7	N8	N9	N10	N11	N12
VALUE	0.025	0.05	0.1	0.2	0.4	0.8	1.6	3.2	6.3	12.5	25	50
SYMBOL												

SURFACE ROUGHNESS

PRODUCT	BMRCL METRO CARS
REF DRG	
MATERIAL	IS: 513-94, Gr.'O'
HEAT TREAT.	
SURFACE TREAT.	
TITLE	LOCKING PLATE-B, TMDGA

APPD	MS	21.08.19
REVD	DB	19.08.19
CHKD	JC	17.08.19
DRWN	ILYAS	
SCALE 1:1	SHEET 1 OF 1	Wt.(kg) 0.07

BEML LIMITED — NEW FRONTIERS. NEW DREAMS

DRG No. 926-81129

ALT 0

A4