MACHINING DEVIATIONS FOR LINEAR DIMENSIONS	RANGE	0 - 6	6 - 30	30 - 120	120 - 315	315-1000	1000-2000	2000-4000	ABOVE 4000	RA
	TOLERANCE	±0.1	±0.2	±0.3	±0.5	±0.8	±1.2	±2	±3	~

FOR DIMENSIONAL TOLERANCES OF SHEET METAL PARTS AND WELDED STRUCTURES, REFER STD. RD-227

UNSPECIFIED TOLERANCE FOR LINEAR AND ANGULAR DIMENSIONS REF. IS 2102 (PT-1) (MEDIUM) | QUALITY OF WELD JOINTS REF, RD 230 MEDIUM

VALUES OF SURFACE TEXTURE SHALL BE AS PER COMPANY STD DS. 1012.C.

WELDING SHALL BE CARRIED OUT AS PER IS: 9595-96

STATUS: ~~MOCKUP/PROTO~~/PRODUCTION

COPY RIGHT & CONFIDENTIAL
THIS DOCUMENT IS THE EXCLUSIVE PROPERTY OF BEML & CONTAINS CONFIDENTIAL INFORMATION. THIS DOCUMENT OR ITS CONTENTS SHALL NOT BE USED, REPRODUCED OR DISCLOSED IN WHOLE OR IN PART, WITHOUT PRIOR WRITTEN PERMISSION OF BEML. THIS DOCUMENT & ALL ITS COPIES SHALL BE RETURNED TO BEML ON DEMAND
DRAWING RELEASED FROM PLM, PHYSICAL SIGNATURE NOT REQUIRED

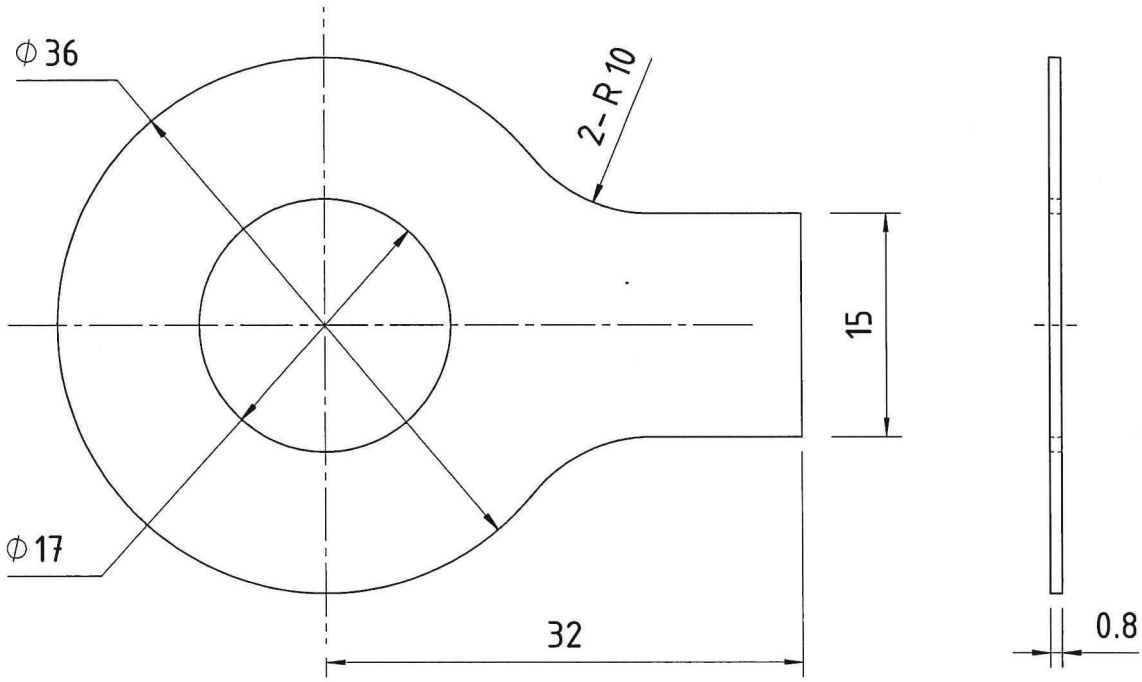

UN CONTROLLED COPY

NOTE:-

1. PART SHALL BE ZINC PLATED AS PER SERVICE GRADE No. 2 OF IS: 1573-86 AND CHROMATE PASSIVATED TO COLOUR IRIDESCENT YELLOW

SL.No.	QTY	PART / STOCK No.	DESCRIPTION	SIZE (mm)	COMPANY STD./I.S / MATERIAL	Wt. (Kg)
		C100603080		50x36x0.8THK		

PRODUCT	BMRCL METRO CARS				
REF DRG					
MATERIAL	IS:513-94, Gr-0				
HEAT TREAT.		APPD	MS		21.08.19
SURFACE TREAT.		REVD	DB		19.08.19
TITLE	LOCKING PLATE-D, CPA	CHKD	JC		17.08.19
		DRWN	ILYAS		
		SCALE	2:1	SHEET 1 OF 1	Wt.(kg) 0.006
	BEML LIMITED NEW FRONTIERS. NEW DREAMS	DRG No.	926-82119		ALT 0

ALT.NO.	ECN NO/CHANGES	DATE	BY	CHKD	APPD

	N1	N2	N3	N4	N5	N6	N7	N8	N9	N10	N11	N12
GRADE No.	0.025	0.05	0.1	0.2	0.4	0.8	1.6	3.2	6.3	12.5	25	50
VALUE												
SYMBOL												
SURFACE ROUGHNESS												