COPY RIGHT & CONFIDENTIAL
This document is the exclusive property of BEML and contains confidential information. This document or its contents shall not be used,reproduced or disclosed in whole or in part,without prior written permission of BEML. This document and all its copies shall be returned to BEML on demand.

DRG. NO. 115 EG 01018

ARTIFICIAL INTELLIGENCE KIT

MACHINING DEVIATIONS FOR LINEAR DIMENSIONS									
ABOVE / UP TO AND INCLUDING	– / 6	6 / 30	30 / 120	120 / 315	315 / 1000	1000 / 2000	2000 / 4000	4000 / –	THE REST
VALUE	±0.1	±0.2	±0.3	±0.5	±0.8	±1.2	±2	±3	

OBJECTIVE:

BEML WOULD LIKE TO CONVERT A DOZER FITTED WITH 105 HP ELECTRONICALLY GOVERNORED ENGINE & ELECTRONICALLY CONTROLLED HYDROSTATIC TRANSMISSION
TO A TELE–OPERATED DOZER AND THEN TO A REMOTE CUM AUTONOMOUSLY OPERATED DOZER.

CONFIGURATION OF BD50HST DOZER:

BD50HST DOZER HAVING SPECIFICATIONS AS BELOW IS MADE USE OF TO MEET THE OBJECTIVE.

A. ENGINE: ELECTRONICALLY GOVERNORED 105HP ENGINE

B. TRANSMISSION: ELECTRONICALLY CONTROLLED HYDROSTATIC TRANSMISSION WITH TWO TRAVEL SPEED CONTROL MODES VIZ 1. VARIABLE MODE: TRAVEL SPEED IS CONTROLLED FROM MIN TO MAX PROPORTIONATELY. 2. STEPPED MODE: TRAVEL SPEED IS CONTROLLED THROUGH GEARS i.e., F1,F2,F3 AND R1,R2,R3

C: ELECTRICAL SYSTEM: 24V OPERATED SYSTEM WITH 2 NOS OF 12V, 160Ah CONNECTED IN SERIES, ENGINE DRIVEN ALTERNATOR CHARGING SYSTEM OF RATING 45A

D. ELECTRICAL CONTROLS:
1. KEY SWITCH: IT IS USED TO MAKE CONTROL PANEL ON/OFF
2. ENGINE START PUSH BUTTON: FOR CRANKING ENGINE
3. ENGINE STOP PUSH BUTTON: FOR STOPPING ENGINE
4. ENGINE ECU: IT CONTROLS OPTIMUM FUEL THROUGH FUEL INJECTION PUMP BASED ON FEEDBACK FROM DIFFERENT ENGINE SENSORS LIKE ENGINE SPEED, ENGINE OIL PRESSURE, ENGINE WATER TEMP AND ENGINE SPEED COMMAND
5. ENGINE SPEED CONTROL: ELECTRICAL KNOB WITH 0 TO 5V DC PROPORTIONAL OUTPUT
6. HYDROSTATIC TRANSMISSION ECU: IT CONTROLS TRAVEL PUMPS & TRAVEL MOTORS PROPORTIONATELY BASED ON TRAVEL JOYSTICK COMMANDS
7. TRAVEL JOYSTICK: IT GIVES 0 TO 5V DC PROPORTIONATE COMMANDS TO HYDROSTATIC TRANSMISSION ECU FOR DOZER FORWARD, REVERSE & STEERING CONTROL WITH DIGITAL SWITCH INPUT REDUNDANCY FOR ITS POSITION VALIDATION
8. HEAD LAMP ROCKER SWITCH: FOR TURING ON/OFF HEAD LAMPS
9. REAR LAMP ROCKER SWITCH: FOR TURNING ON/OFF REAR LAMPS
10. FOG LAMP ROCKER SWITCH: FOR TURING ON/OFF FOG LAMPS
11. MODE SELECTION ROCKER SWITCH: FOR SELECTION OF VARIABLE OR STEPPED MODE
12. EMERGENCY STOP ROCKER SWITCH: TO STOP ENGINE UPON EMERGENCY
13. HORN SWITCH: IT IS A MICRO SWITCH INTEGRAL OF BLADE CONTROL JOYSTICK FOR CONTROLLING HORN THROUGH A RELAY
14. BATTERY POSITIVE ISOLATION RELAY: IT IS KEY SWITCH CONTROLLED, HEAVY DUTY CUT OFF RELAY, FOR ISOLATING BATTERY POSITIVE TERMINAL FROM THE SYSTEM

E. INSTRUMENTATION SYSTEM: 4.3 INCH LCD DISPLAY INSTRUMENTATION SYSTEM FOR DISPLAYING EQUIPMENT GAUGE PARAMETERS, STATUS INDICATORS & WARNINGS. IT RECEIVES SIGNALS FROM ENGINE ECU & HYDROSTATIC TRANSMISSION ECU OVER CAN COMMUNICATION CAN J1939 2.0B NETWORK.

1. GAUGE & NUMERICAL PARAMETERS AVAILABLE ON DISPLAY:
a. ENGINE OIL PRESSURE
b. ENGINE WATER TEMPERATURE
c. ENGINE SPEED/RPM
d. VOLT METER
e. EQUIPMENT SPEED/GEAR SELECTION

2. BAR GRAPH PARAMETERS
a. LEFT STEERING & RIGHT STEERING
b. FUEL LEVEL
c. HYDRAULIC OIL TEMPERATURE

3. WARNING INDICATORS:
a. ENGINE OIL PRESSURE
b. ENGINE WATER TEMPERATURE
c. FUEL LEVEL
d. HYDRAULIC OIL TEMPERATURE
e. VOLT METER

4. STATUS INDICATORS:
a. MODE SELECTION SWITCH: STEPPED/VARIABLE
b. EQUIPMENT CURRENT GEAR

F. DOZER BLADE CONTROL: PILOT HYDRAULIC JOYSTICK IS PROVIDED FOR BLADE CONTROL. PILOT OPERATED HYDRAULICALLY CONTROLLED DOZER BLADE WILL BE UPGRADED TO ELECTRO HYDRAULIC CONTROLS THROUGH AN ELECTRICAL JOYSTICK & LOAD SENSING CYLINDERS IN DUE COURCE BY BEML.

DOZER WITH THE LISTED SPECIFICATIONS IS PROPOSED TO BE CONVERTED TO A TELE–OPERATED DOZER AND THEN TO A REMOTE CUM AUTONOMOUSLY OPERATED DOZER. VENDOR TO SUPPLY REQUIRED SCOPE OF ITEMS, INTEGRATE & VALIDATE TILL THE SATISFACTION OF BEML.

SCOPE OF SUPPLY BY VENDOR

VENDOR TO SUPPLY A COMPLETE SOLUTION CONSISTING OF HARDWARE & SOFTWARE THAT IS REQUIRED FOR CONVERTING THE DOZER INTO A TELE–OPERATED DOZER AND THEN ONTO AUTONOMOUS DOZER.

SCOPE OF DELIVERABLES FOR TELE–OPERATION:

TELE OPERATION MODE IS REQUIRED TO OPERATE THE DOZER THROUGH A REMOTE PENDANT WITH LINE OF SIGHT CONTROL OF DISTANCE ABOUT 1 KM IN HAZARDOUS/REMOTE AREAS WHERE SATELLITE COMMUNICATION LIKE GPS/GNSS/IRNSS REACH IS NOT AVAILABLE.

FOLLOWING DELIVERABLES TO BE SUPPLIED BY VENDOR FOR COMPLETE REALIZATION OF TELE OPERATION AND ALSO VENDOR SHALL ARRANGE REQUIRED HARDWARE/SOFTWARE DURING ENGINEERING IF NECESSARY

1) DOZER DRIVE MODULE: CONSISTING OF INTELLIGENT MACHINE CONTROL UNIT, I/O MODULE, AMPLIFIER MODULE

2) DOZER COMMUNICATION MODULE– GNSS/GPS/NAVIC COMMUNICATION FOR MACHINE LOCATION W.R.T TIME & SPACE. INERTIAL MEASUREMENT UNIT FOR SPEED/ACCELERATION MEASUREMENT

3) DOZER VISION MODULE: THE VEHICLE SHALL BE EQUIPPED WITH SURROUNDING SENSE SENSOR PACKAGE INCLUDING LIDAR, CAMERAS, RADAR, ULTRASOUND WITH REAL–TIME SENSOR FUSION FOR LOCAL NAVIGATION (DECISION MAKING CAPABILITY WHILE IN MOTION)

4) PORTABLE BASE STATION– A TRANSCEIVER FOR COMMANDING DOZER VIA A RADIO LINK FOR ABOUT 1 KM DISTANCE APART & FOR RECEIVING VEHICLE VITAL INFORMATION ON THE SAME. IT SHALL HAVE A DISPLAY TO VIEW RECEIVED PARAMETERS/INFO AND TO VIEW LIVE VIDEO STREAMING OF DOZER WHEN DOZER IS UNDER OPERATION.

5) SENSORS: INERTIAL MEASUREMENT UNIT
6) SOFTWARE: FOR LINE OF SIGHT OPERATION & CONTROL
7) GPS TRACKING SYSTEM
8) POWER SUPPLY MODULE

SCOPE OF DELIVERABLES FOR REMOTE CUM AUTNOMOUS OPERATION:

1)AERIAL SURVEILLANCE MODULE– FOR 3D TERRAIN MAPPING
2)SOFTWARE– INCLUDING MACHINE LEARNING, DATA ANALYTICS & ALGORITHMS FOR CONTROLS.
3)DIGITAL TWINNING MODULE
4)HIGH SPEED INTERNET INFRASTRUCTURE AND NECESSARY HARDWARE FOR REMOTE MONITORING & CONTROL
5) GNSS ANTENNA CUM RECEIVER FOR IDENTIFYING POSITION OF THE BLADE

TOPOLOGY FOR AUTONOMOUS CONTROL

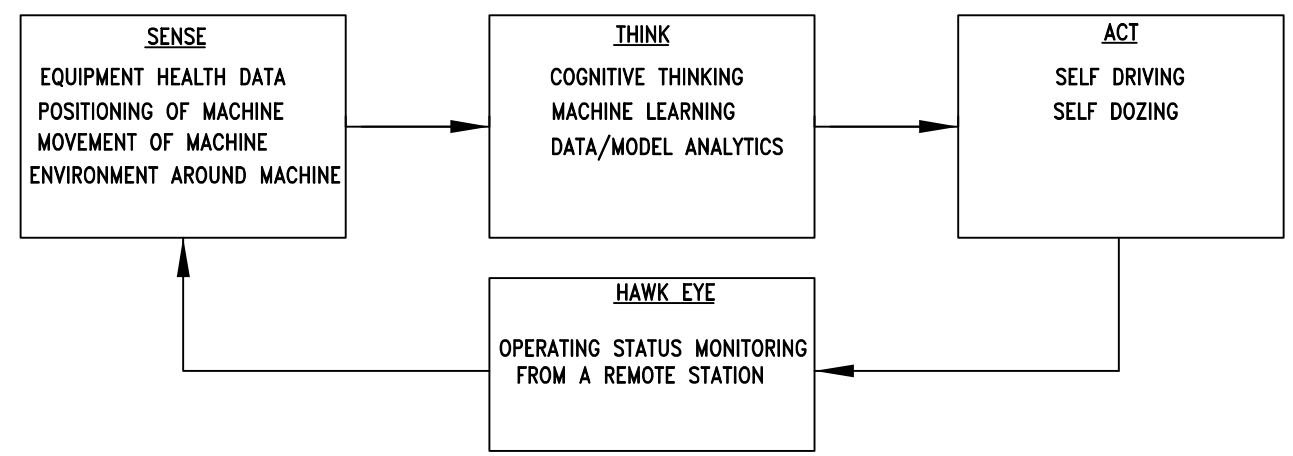

OPERATING MODES:

1. FULLY AUTONOMOUS NAVIGATION AND INTELLIGENT IMPLEMENT CONTROL
IT SHOULD HAVE FOLLOWING FEATURES:

A. COGNITIVE THINKING & MACHINE LEARNING CAPABILITIES
B. SELF DRIVING CAPABILITY
C. DYNAMIC MISSION SCHEDULING
D. REAL TIME TERRAIN DATA BASED AUTOMATIC BLADE CONTROL
E. TRACK SLIP & BLADE OVERLOAD INTELLIGENT ADJUSTMENT
F. CLOUD BASED OPERATING STATUS/MACHINE HEALTH PARAMETERS UPDATE
G. DIFFERENT DOZING MODES BASED ON TERRAIN NATURE
H. GEO–FENCING

2. REMOTE CONTROLLED MODE:
IT SHALL HAVE FOLLOWING FEATURES

1. DIGITAL TWINNING
2. REMOTE CONTROL OF ALL DOZER FUNCTIONS
3. REMOTELY WORK SCHEDULING & MONITORING

3. TELE OPERATED MODE:
IT SHOULD HAVE FOLLOWING FEATURES

1. LINE OF SIGHT CONTROL
2. DRIVING & DOZING CAPABILITIES THROUGH A REMOTE PENDANT
3. REMOTE STARTING & REMOTE STOPPING

COMMUNICATION AMONG CONTROLLERS

SAE CAN J1939 2.0B IS THE COMMUNICATION STD TO BE FOLLOWED ACROSS BUT RS232 SERIAL/USB COMMUNICATION PROVISION SHOULD BE AVAILABLE

NEXT ASSY.

	AMEND NO.	SIGNATURE	DATE
DRA/ECN	NAME		
APPROVED	HEMANT KUMAR		27.08.2019
REVIEWED	CM DUDHE		25.08.2019
CHECKED	CM DUDHE		23.08.2019
DRAWN	AMAN		20.08.2019
STDS.	CHANDRA		20.08.2019

USED ON	QTY
BD50 HST	01

PRODUCT: DOZER
DESIGN REF.: --
MATL: --
H.T. --
S.T. --
Wt. in kg: --
SCALE: NTS
TITLE: AUTONOMOUS DOZER
SHEET NO. 1
NO. OF SHEETS 2
BEML LIMITED KGF
NEW FRONTIERS NEW DREAMS
DRG. NO. 115 EG 01018

COPY RIGHT & CONFIDENTIAL
This document is the exclusive property of BEML and contains confidential information. This document or its contents shall not be used,reproduced or disclosed in whole or in part,without prior written permission of BEML. This document and all its copies shall be returned to BEML on demand.

DRG. NO. 115 EG 01018

ARTIFICIAL INTELLIGENCE KIT

MACHINING DEVIATIONS FOR LINEAR DIMENSIONS									
ABOVE / UP TO AND INCLUDING	– / 6	6 / 30	30 / 120	120 / 315	315 / 1000	1000 / 2000	2000 / 4000	4000 / –	THE REST
VALUE	±0.1	±0.2	±0.3	±0.5	±0.8	±1.2	±2	±3	

OPERATING VOLTAGES

THE SYSTEM/UNIT SHOULD WORK ON ALTERNATOR–BATTERY SUPPLY OF 9–32V AVAILABLE ON THE EQUIPMENT. IT SHOULD BE PROTECTED AGAINST OVER VOLTAGE, REVERSE VOLTAGE, TRANSIENT AND VOLTAGE FLUCTUATIONS AND ELECTRICAL NOISE CAUSED BY OPERATION OF INDUCTIVE LOAD LIKE MOTORS, SOLENOIDS , HORNS, WIPER ETC.,
PROPER PROTECTIONS ARE TO BE TAKEN CARE IN UNIT TO AVOID MALFUNCTIONING OF THE SYSTEM DUE TO EMI/EMC INTERFERENCE.

BRIEF SPECIFICATIONS OF INTELLIGENT MACHINE CONTROL UNIT:

INTELLIGENT MACHINE CONTROL UNIT SHALL HAVE SUFFICIENT NO' OF ANALOG AND DIGITAL I/Os TO ISSUE REPLICATED COMMANDS OF TRAVEL JOYSTICK & BLADE OPERATION JOYSTICK

DIGITAL INPUT : 10 NO'S
DIGITAL OUTPUT : 10 NO'S
ANALOG INPUT : 05 NO'S
PWM OUTPUT : 06 NO'S
ANALOG O/Ps : 10 NO'S
PROVISION FOR SOFTWARE CONFIGURATION OF I/Os TO BE AVAILABLE
RESISTIVE I/Ps : 04 NO'S
COMMUNICATION : CAN J1939 & RS232/USB
GPS : COMPATIBLE/AVAILABLE THROUGH A SIM

ENVIRONMENTAL CONDITIONS OF SYSTEMS

OPERATING TEMPERATURES : –20°C TO 85 C
STORAGE TEMPERATURE : –20°C TO 85°C
PROTECTION : IP67(MIN)
EMISSION : IEC 60945,95/54/EC.
IMMUNITY : SAE J1113, ISO 11452.
VIBRATION : RANDOM VIBRATION, 7.86 GRMS(5–2000 Hz) 3 AXIS.
SHOCK :± 50G IN 3 AXIS

FUNCTIONAL REALISATION:

1. TELE OPERATION:

THIS PORTABLE, OVER–THE–SHOULDER CONSOLE SHALL ALLOW OPERATOR TO WORK SAFELY AND COMFORTABLY OFF THE MACHINE, WHILE REMAINING ON–SITE AND IN DIRECT VISUAL CONTACT. IT'S IS REQUIRED FOR SHORT–TERM AND EMERGENCY USE.

INTELLIGENT MACHINE CONTROL UNIT SHOULD BE ABLE TO RECEIVE COMMANDS FROM REMOTE PENDANT THROUGH A RADIO LINK/ANTENNA SET UP AND INTELLIGENT CONTROL UNIT SHOULD FURTHER COMMAND/COMMUNICATE TO MACHINE CONTROL UNIT FOR EXECUTION OF COMMANDS SENT BY REMOTE PENDANT

REMOTE & AUTONOMOUS OPERATION:

REMOTE OPERATION: IT WILL BE FROM A COMMAND CENTER ON SITE OR MANY MILES AWAY, IT SHALL ALLOW OPERATORS TO WORK FOR LONG PERIODS OF TIME WHILE SEATED IN A SAFE, COMFORTABLE VIRTUAL CAB. IT REQUIRES VIDEO AND AUDIO SUPPORT OVER A HIGH–SPEED COMMUNICATIONS NETWORK.

AUTONOMOUS OPERATION: INITIALLY AREAL SURVEY/MAPPING OF THE MINE TO BE CARRIED OUT FOR PATH DEFINITION & DURING WORKING DOZER TO FOLLOW THE DEFINED PATH AND CLEAR THE PILE ACCORDINGLY BY CHOOSING REQUIRED GEARS ON ITS OWN BY INTELLIGENCE MACHINE CONTROL UNIT. GEAR SELECTION TO HAPPEN BASED ON THE LOAD CONDITIONS PERCEIVED BY THE BLADE. BLADE LOCATION TO BE EVALUATED USING GNSS/GPS ANTENNA AND THIS TO BE PASSED ON TO INTELLIGENT MACHINE CONTROL UNIT. LOAD ON THE MACHINE TO BE CALCULATED BY USING LOAD SENSING CYLINDERS/BY ANY OTHER MEANS AS PER PREVAILING TECHNOLOGIES SUCH AS TO PROVIDE PRECISE LOAD SCENARIO TO INTELLIGENT MACHINE CONTROL UNIT. INTELLIGENT MACHINE CONTROL UNIT WILL COMMAND/COMUNICATE TO MACHINE CONTROL UNIT THROUGH MULTIPLE ANALOG/DIGITAL I/Os

ADDITIONAL FEATURES:

A. MAPPING & TRACKING

1. GPS TRACKING
2. GEO FENCING
3. OPERATING HOURS
4. OTHER SECURITY PARAMETERS (FUEL THEFT, THEFT PROTECTION)

B. OPERATING REPORTS

1. MACHINE HOUR DETAILS
2. MACHINE UTILISATION REPORT
3. MACHINE PRODUCTION REPORT
4. WORK SHIFT REPORT
5. ENGINE STATUS REPORT

C. SERVICE MANAGEMENT

1. MACHINE HEALTH MONITORING & REMOTE DIAGNOSTICS
2. SERVICE SCHEDULING/PLAN
3. SERVICE REMINDER
4. MACHINE DATA BACKUP
5. CRITICAL MACHINE HEALTH ALERTS

IMPORTANT NOTES:

1. VENDOR TO INTEGRATE & VALIDATE ALL THE FUNCTIONS OF THE ABOVE SAID MODES MUTUALLY WITH BEML AT BEML, KGF ONLY.

2. TELE OPERATION AND AUTONOMOUS OPERATION TO BE PROVED OUT AND VALIDATION TO BE CARRIED OUT AT BEML, KGF ONLY. THE MACHINE WILL NOT BE SENT AND POSITIONED TO VENDOR PLACE FOR ENGINEERING, SOFTWARE DEVELOPMENT AND CALIBRATION.

3. AFTER SUCCESSFUL VALIDATION, SOFTWARES USED FOR DEVELOPMENT ARE TO BE KEPT ACTIVE AND VENDOR TO EXTEND THE SERVICE FOR SOFTAWRE RELATED ISSUES TO BEML WHENEVER REQUIRED BY IT.

4. OPERATIONAL LATENCY/DELAYS OF SYSTEMS ON MACHINE IF ANY PERSISTS DURING DEVELOPMENT, VENDOR TO TAKE NECESSARY HARDWARE/SOFTWARE CORRECTION

GENERAL NOTES:

1. THE SIZE OF THE MACHINE CONTROL UNIT AND OTHER RELATED COMPONENTS SHALL BE AS COMPACT AS POSSIBLE
2. THE SCOPE OF THE DELIVERABLES LIKE SIM CARDS, APPLICATION SOFTWARE, SUBSCRIPTION CHARGES SHALL BE MUTUALLY DISCUSSED & DECIDED.
3. SUPPLIER SHALL IMPART TECHNICAL TRAINING TO BEML PERTAINING TO INSTALLATION, COMMISSIONING & PERIODIC MAINTENANCE OF EQUIPMENTS.
4. THE SUPPLIER SHALL WORK OUT FOR DATA CREATION REQUIRED FOR EQUIPMENT TRACKING & MANAGEMENT IN CONSULTATION WITH BEML.
5. SUPPLIER TO SPECIFY THE MINIMUM CONFIGURATION OF THE PC'S/ LAPTOP, INTERNET CONNECTIVITY & OS SYSTEM ETC.. FOR PROPER WORKING OF APPLICATION SOFTWARE.
6. SUPPLIER SHOULD PRODUCE OPERATION & MAINTENANCE MANUAL OF ALL SYSTEMS AND RELEVANT TEST CERTIFICATES

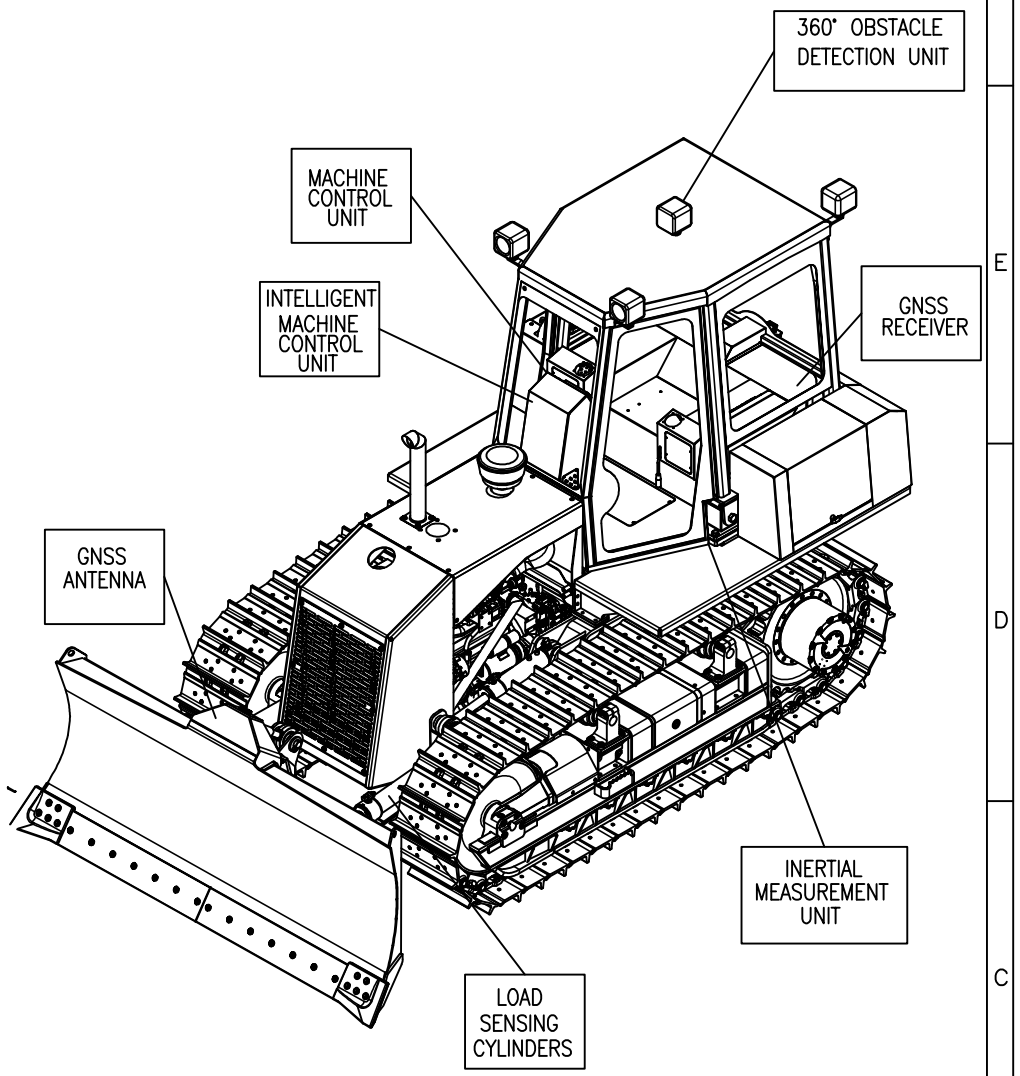

NEXT ASSY.					
	AMEND	NO.	SIGNATURE	DATE	
DRA/ECN	NAME				
APPROVED	HEMANT KUMAR			27.08.2019	
REVIEWED	CM DUDHE			25.08.2019	
CHECKED	CHANDRA			23.08.2019	
DRAWN	AMAN			20.08.2019	
STDS.	SARVESH			20.08.2019	

PRODUCT: DOZER
DESIGN REF.: --
USED ON: BD50 HST | QTY: 01
MATL: --
H.T. --
S.T. --
Wt. in kg: --
SCALE: NTS
TITLE: AUTONOMOUS DOZER
SHEET NO. 2
NO. OF SHEETS 2
BEML LIMITED KGF
NEW FRONTIERS NEW DREAMS
DRG. NO. 115 EG 01018